Sheet: CPU

File: cpu.sch

Sheet: CPU-POWER

File: cpu-power.sch

Sheet: PMU

File: pmu.sch

Sheet: AUDIO

File: audio.sch

Sheet: USB

File: usb.sch

Sheet: ID

File: id.sch

Sheet: SD/SIM

File: card.sch

Sheet: GPS

File: gps.sch

File: gta02-core-expanded.sch

Sheet: /

File: GTA02-CORE

Size: A4

Date: 12 m

KiCad E.D.A. eeschema (2008052.6 SV

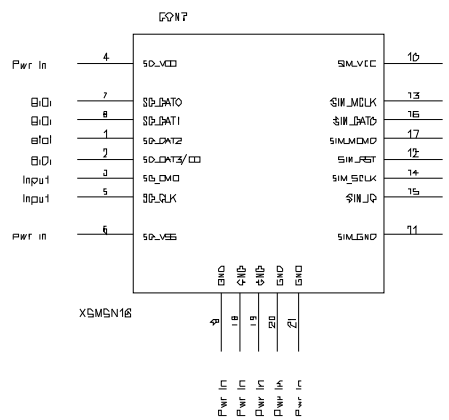

File: cards.sch	
Sheet: /SD/SIM/	
Title:	
Size: A4	Date:
KiCad E.D.A. eeschema (2008.05.26-5)	

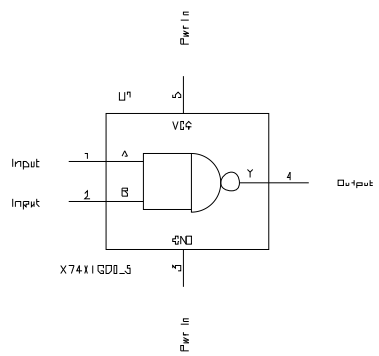

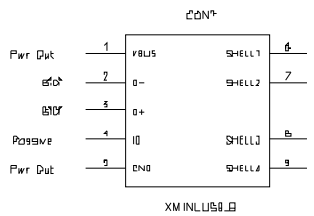

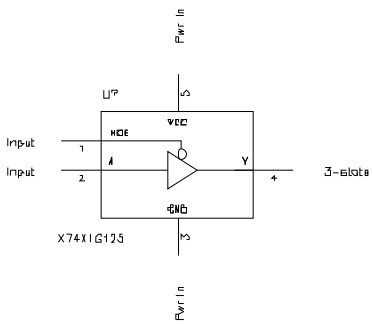

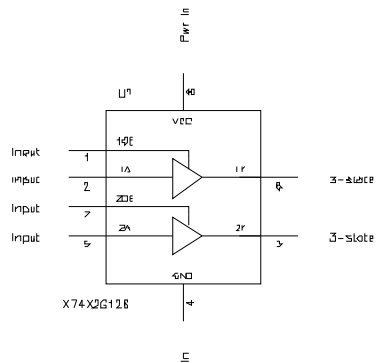

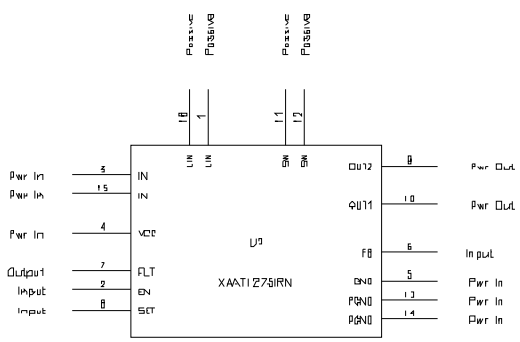

File: usb.sch	
Sheet: /USB/	
Title:	
Size: A4	Date:
KiCad E.D.A. eeschema (2008052.6 5V	

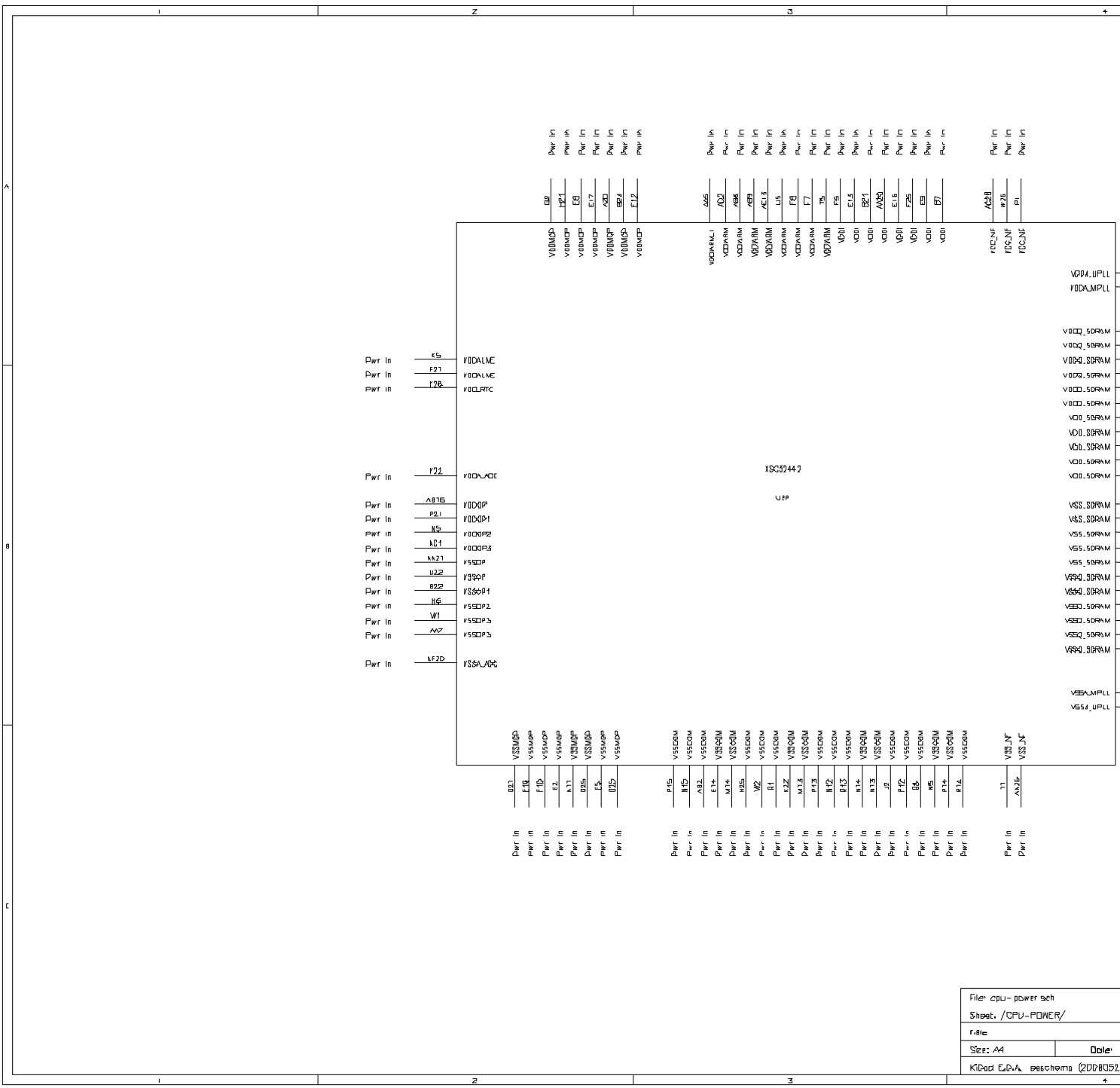
XSC32442
U3P
VDDALME
VDDALME
VDDALRTC
VDDA_ADC
VDDQP
VDDQP1
VDDQP2
VDDQP3
VSSQP
VSSQP
VSSQP1
VSSQP2
VSSQP3
VSSQP3
VSSA_ADC
VDDA_MPLL
VDDA_UPLL
VSSA_MPLL
VSSA_UPLL
VDDQ_SDRAM
VSSQ_SDRAM
VDDI_SDRAM
VSSI_SDRAM
VDDO_SDRAM
VSSO_SDRAM
VDDA_SDRAM
VSSA_SDRAM
VDDC_NF
VSSC_NF
VSS_NF
Pwr In
Pwr In
Pwr In

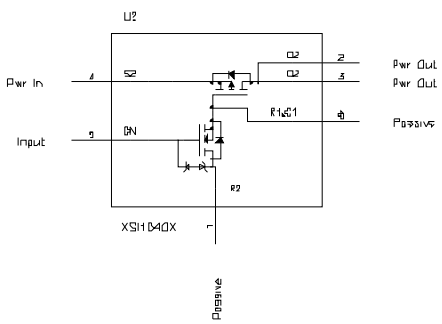

File: gps.sch	
Sheet: /GPS/	
Title:	
Size: A4	Date:
KiCad E.D.A. eeschema (2008.05.26-5)	

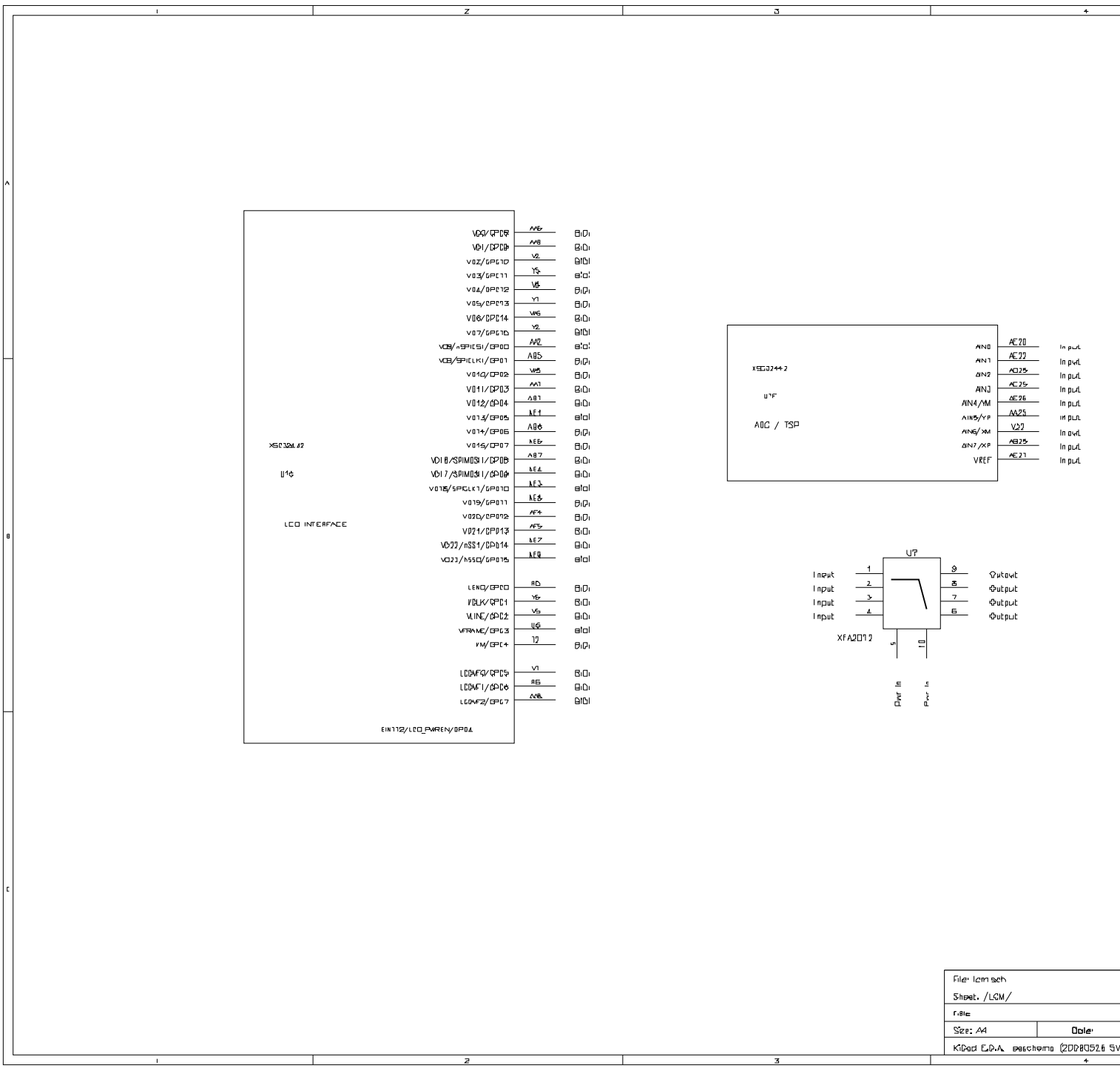

XSC324.42
U16
LCD INTERFACE
VD0/GPC0
VD1/GPC0
VD2/GPC10
VD3/GPC11
VD4/GPC12
VD5/GPC13
VD6/GPC14
VD7/GPC15
VD8/nSPICS1/GPD0
VD9/SPICLK1/GPD1
VD10/GPD2
VD11/GPD3
VD12/GPD4
VD13/GPD5
VD14/GPD6
VD15/GPD7
VD16/SPIMOSI1/GPD8
VD17/SPIMOSI1/GPD9
VD18/SPICLK1/GPD10
VD19/GPD11
VD20/GPD12
VD21/GPD13
VD22/nSS1/GPD14
VD23/nSS0/GPD15
LEND/GPC0
VCLK/GPC1
VLINE/GPC2
VFRAME/GPC3
VM/GPC4
LCDMF0/GPC5
LCDMF1/GPC6
LCDMF2/GPC7
EIN112/LCD_PWREN/GPD4
AA6
AA8
V2
Y5
V6
Y1
W6
Y2
AA2
AB5
W5
AA1
AB1
AE1
AB6
AE6
AB7
AE4
AE3
AE8
AF4
AF5
AE7
AE9
AD
Y6
V5
U6
T2
V1
AB
AA8
XSC324.42
U7F
ADC / TSP
AIN0
AIN1
AIN2
AIN3
AIN4/YM
AIN5/YP
AIN6/XM
AIN7/XP
VREF
AE20
AE22
AE25
AE26
AA25
V22
AB25
AE21
Input
U7
XFA2072
Input
Output
Pwr In
File: lcm.sch
Sheet: /LCM/
File:
Size: A4
Date:
KiCad E.D.A. eeschema (2008052615V

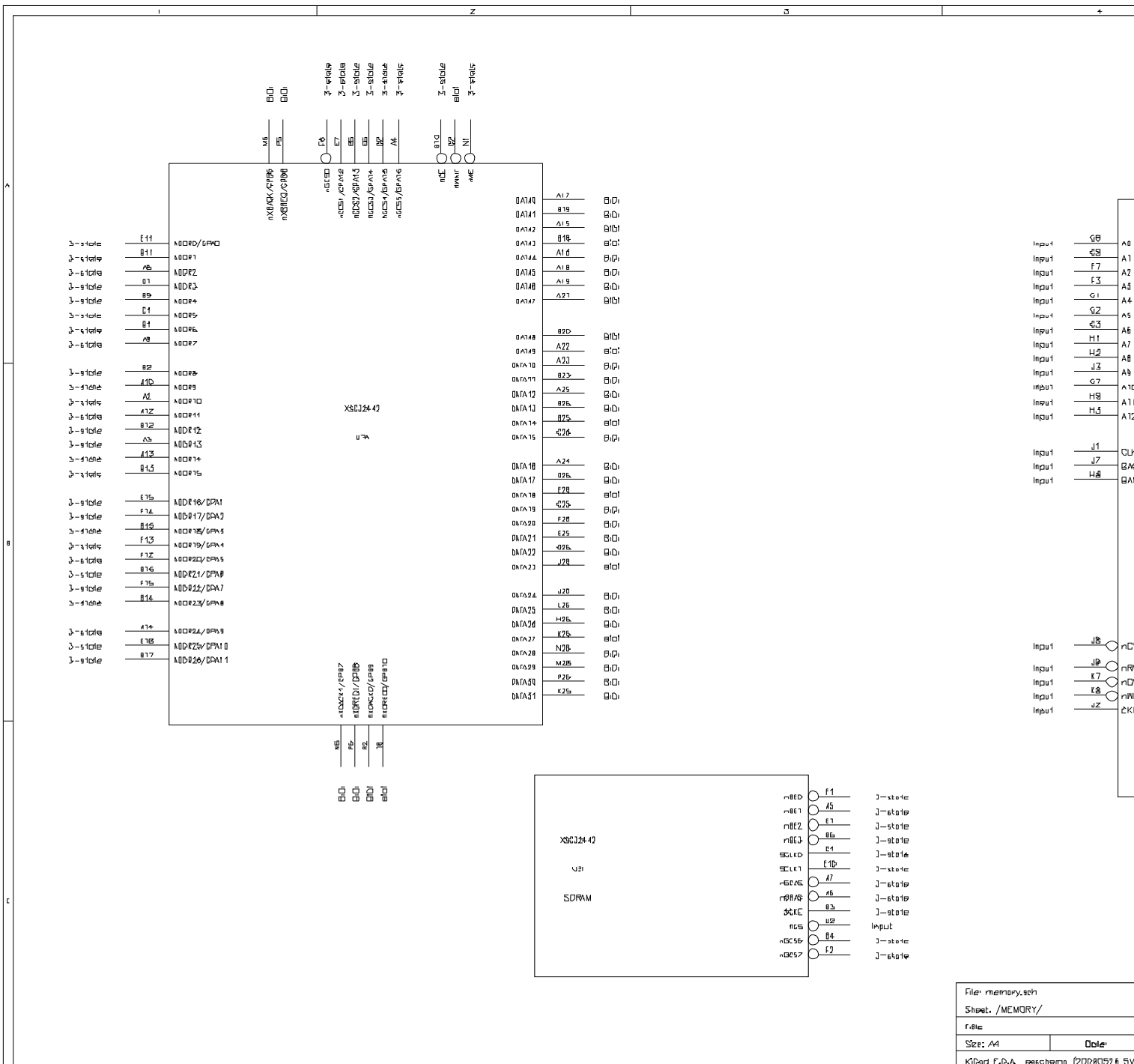
XSC3242
U3A
XSC3242
U3I
SDRAM
File: memory.sch
Sheet: /MEMORY/
File:
Size: A4
Date:
KiCad E.D.A. eeschema (2008052 6 5V

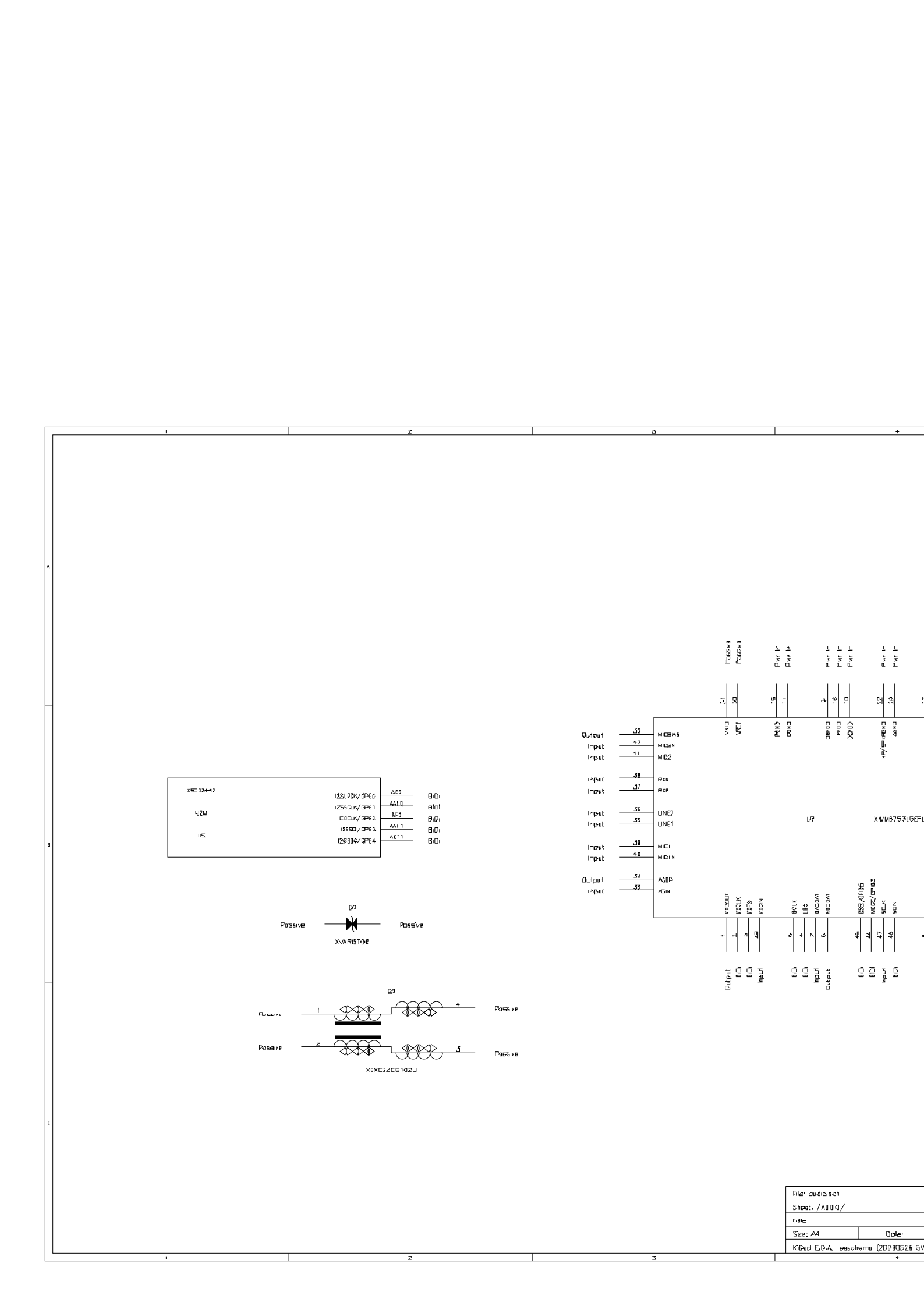

File: audio.sch	
Sheet: /AUDIO/	
Title:	
Size: A4	Date:
KiCad E.D.A. eeschema (2008-05-26 BZR 1)	

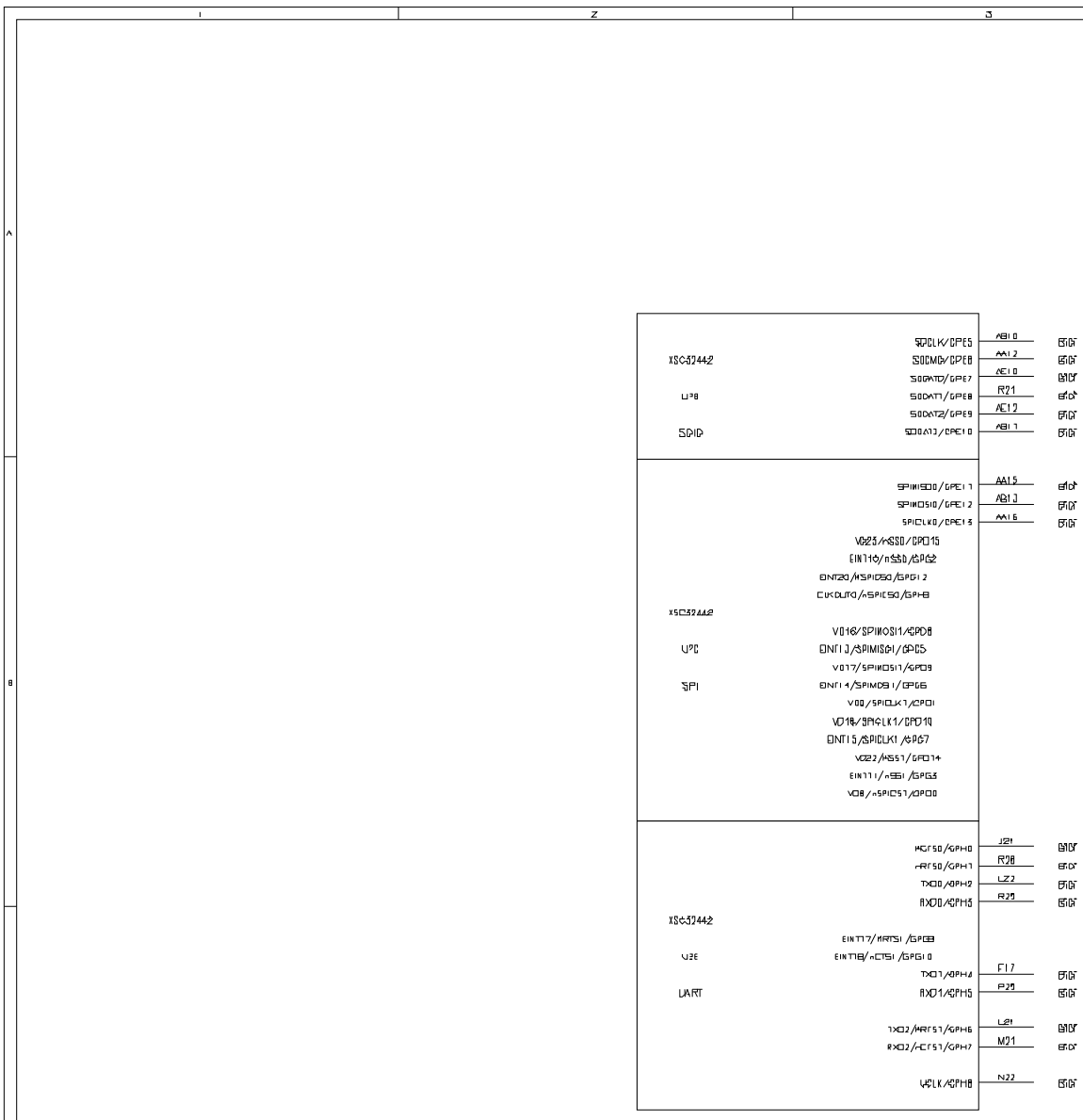

File: id.sch	
Sheet: /ID/	
Title:	
Size: A4	Date:
KiCad E.D.A. eeschema (2008052.6 5V	

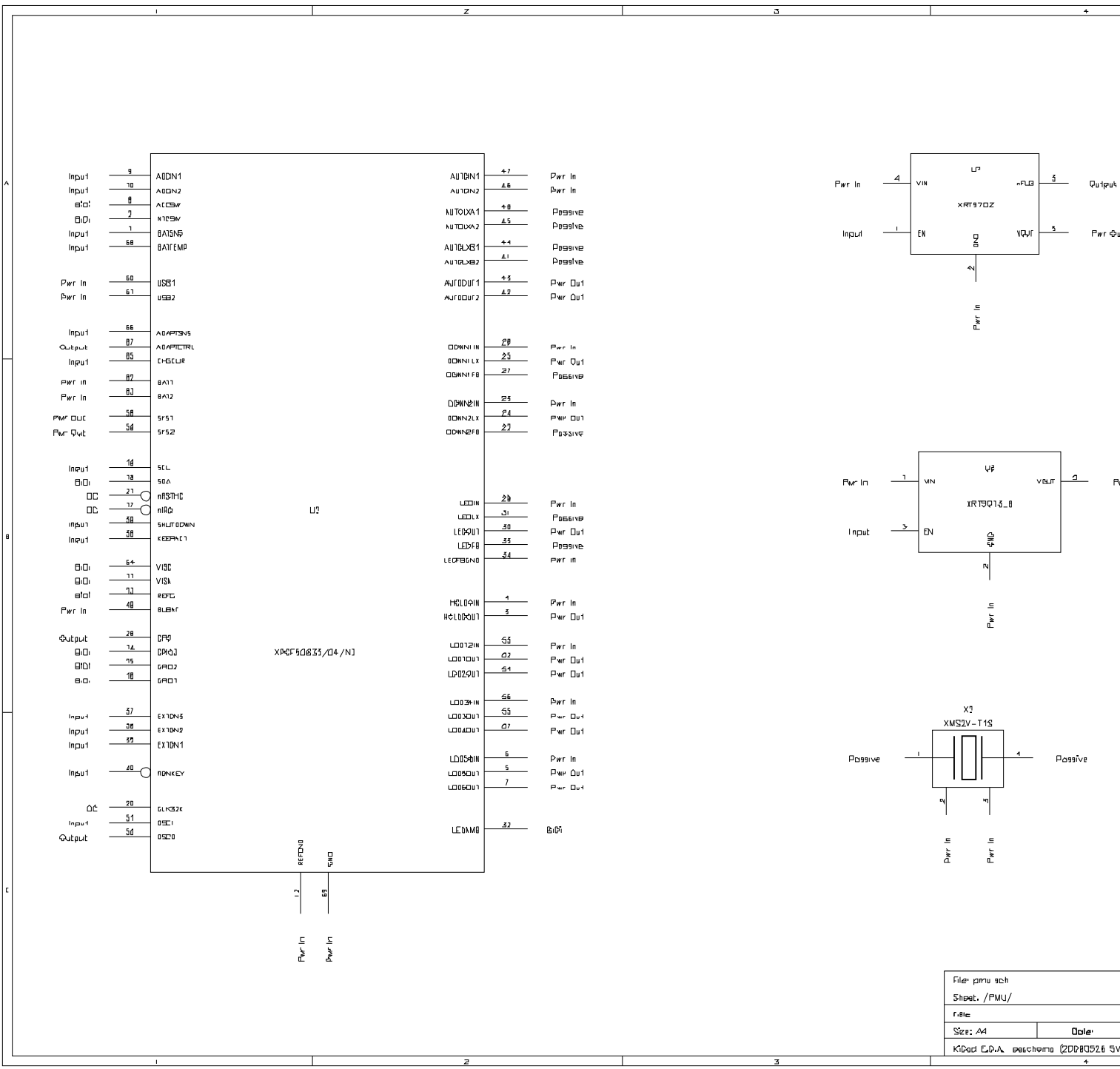

XRT9702
XRT9713_8
XMS2V-T1S
Pwr In
Input
Output
Passive
File: pmu.sch
Sheet: /PMU/
Size: A4
Date:

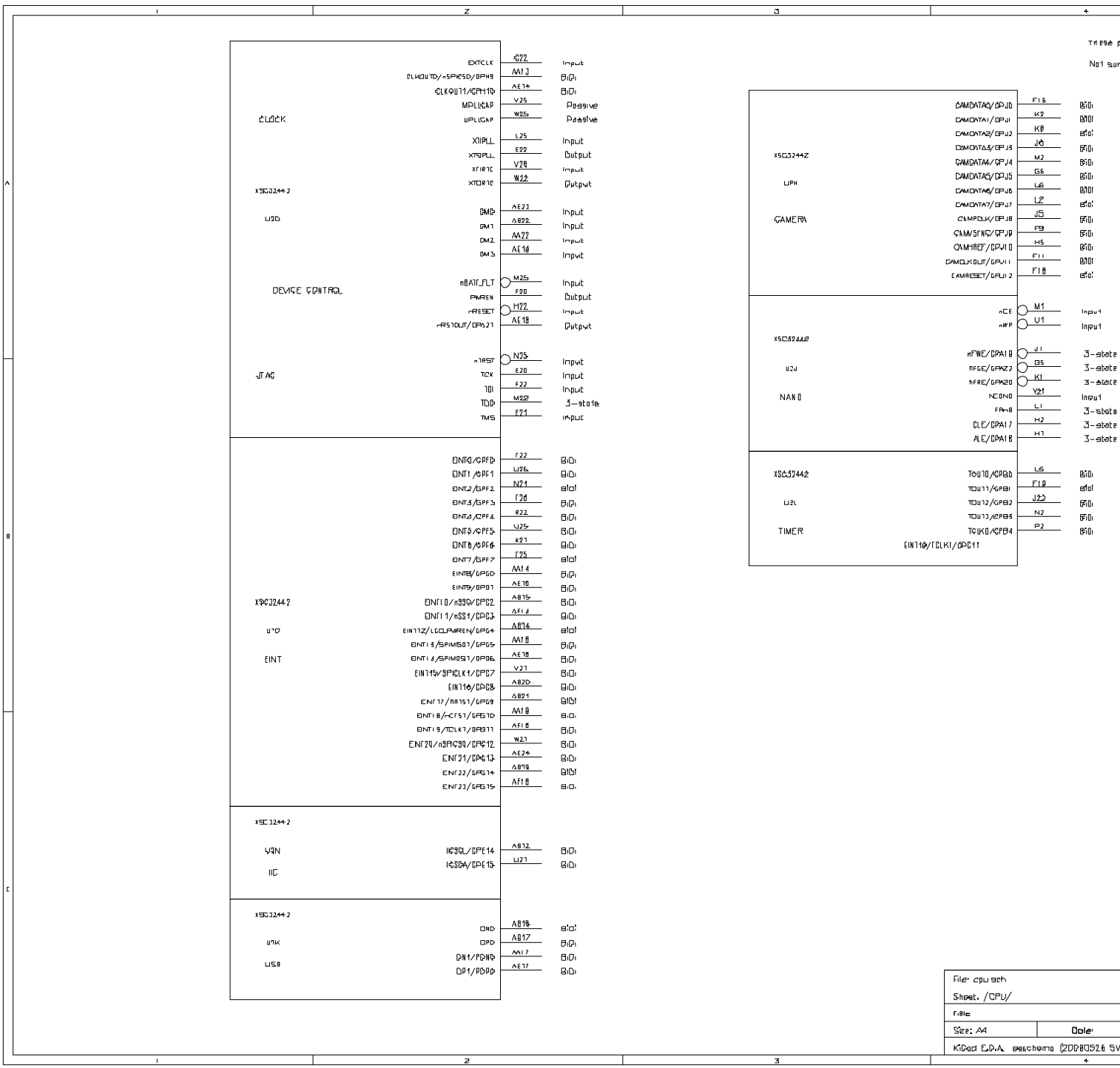
CLOCK
XSS3244Z
U3D
EXTCLK
CLKOUT0/nSPMISO/GPH9
CLKOUT1/SPH10
MPLLCAP
UPLLCAP
XTIPLL
XTOPLL
XTIRTC
XTORTC
DEVICE CONTROL
JTAG
nBATT_FLT
PWREN
nRESET
nRSTOUT/GPA21
nTRST
TCK
TDI
TDO
TMS
EINT
XSS3244Z
U3C
EINT0/GPF0
EINT1/GPF1
EINT2/GPF2
EINT3/GPF3
EINT4/GPF4
EINT5/GPF5
EINT6/GPF6
EINT7/GPF7
EINT8/GPG0
EINT9/GPG1
EINT10/nSS0/GPG2
EINT11/nSS1/GPG3
EINT12/LCDCLAMREN/GPG4
EINT13/SPIMISO1/GPG5
EINT14/SPIMOSI1/GPG6
EINT15/SPICLK1/GPG7
EINT16/GPG8
EINT17/nRSTO/GPG9
EINT18/nCTS1/GPG10
EINT19/TCLK1/GPG11
EINT20/nSPICS0/GPG12
EINT21/GPG13
EINT22/GPG14
EINT23/GPG15
XSS3244Z
U2C
I2CSCL/GPE14
I2CSDA/GPE15
XSS3244Z
U2A
GND
GPD
GND/PGND
GPI/PGPD
Input
BiDi
Passive
Output
3-state
CAMERA
XSS3244Z
U2H
CAMDATA0/GPJ0
CAMDATA1/GPJ1
CAMDATA2/GPJ2
CAMDATA3/GPJ3
CAMDATA4/GPJ4
CAMDATA5/GPJ5
CAMDATA6/GPJ6
CAMDATA7/GPJ7
CAMPCLK/GPJ8
CAMVSYNC/GPJ9
CAMHREF/GPJ10
CAMCLKOUT/GPJ11
CAMRESET/GPJ12
NAND
XSS3244Z
U2J
nCE
nWP
nFWE/GPA18
nFRE/GPA19
nFALE/GPA20
NCOND
FRnB
CLE/GPA17
ALE/GPA18
TIMER
XSS3244Z
U2L
TOUT0/GPB0
TOUT1/GPB1
TOUT2/GPB2
TOUT3/GPB3
TCLKO/GPB4
EINT16/TCLK1/GPG11
File: cpu.sch
Sheet: /CPU/
Title:
Size: A4
Date:
KiCad E.D.A. eeschema (2008-05-26 BZR 1