CPU
15xx
R2502
cpu.sch
CPU-POWER
15xx
cpu-power.sch
PMU
17xx
R2504
pmu.sch
MEMORY
22xx
U1501
R1801
memory.sch
AUDIO
30xx
41xx
43xx
44xx
U1501
audio.sch
USB
49xx
U1501
R1918
usb.sch
IO
46xx
47xx
78xx
15xx
io.sch
LCM
60xx
U1501
lcm.sch
SD-SIM
75xx
U1501
sd-sim.sch
GPS
76xx
gps.sch
BT
77xx
x
bt.sch
WLAN
80xx
wlan.sch
MODEM
81xx
modem.sch

CPU

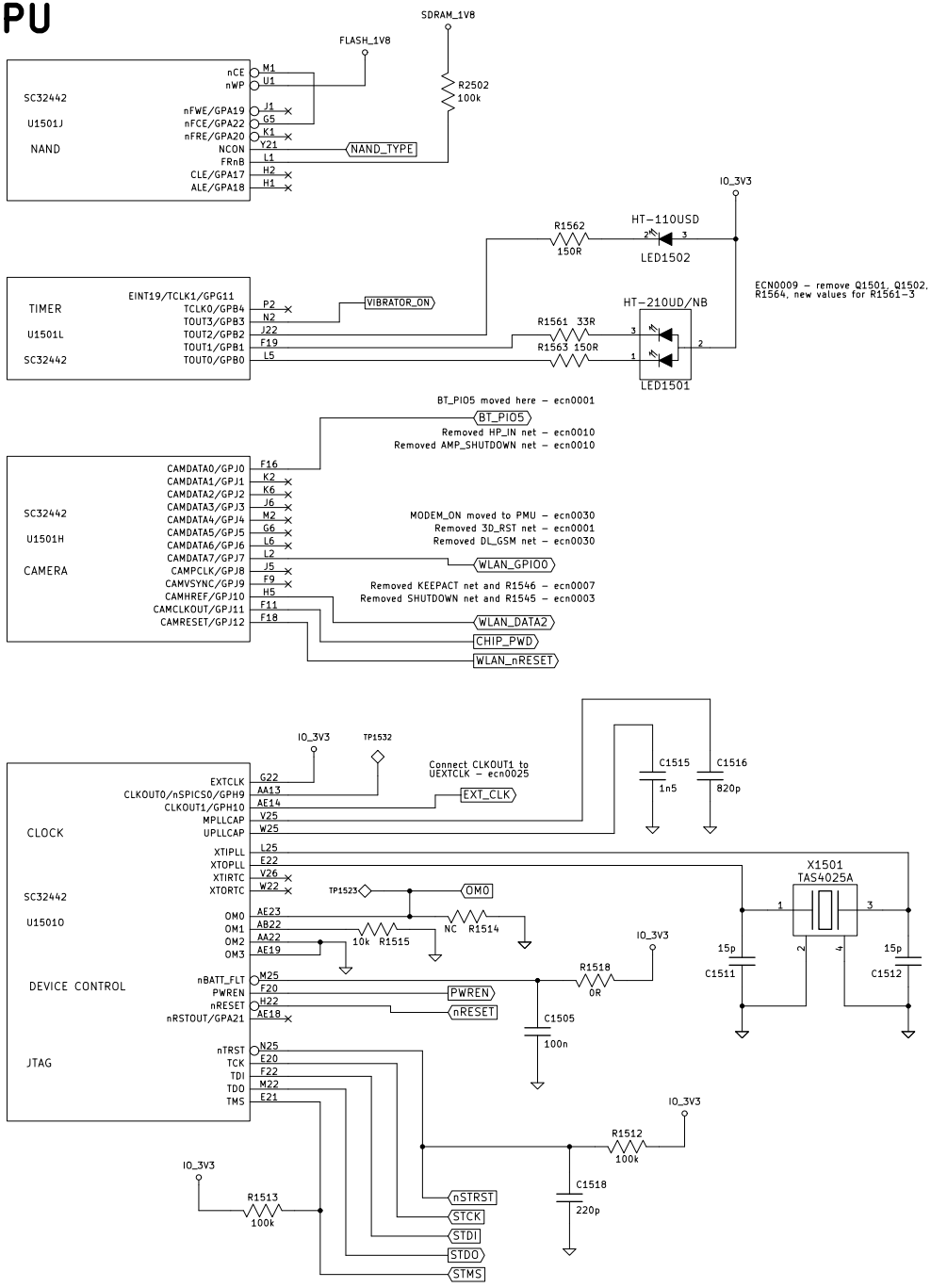
SDRAM_1V8
FLASH_1V8
R2502
100k
SC32442
U1501J
NAND
nCE
nWP
nFWE/GPA19
nFCE/GPA22
nFRE/GPA20
NCON
FRnB
CLE/GPA17
ALE/GPA18
NAND_TYPE
IO_3V3
R1562
150R
HT-110USD
LED1502
TIMER
U1501L
SC32442
EINT19/TCLK1/GPG11
TCLK0/GPB4
TOUT3/GPB3
TOUT2/GPB2
TOUT1/GPB1
TOUT0/GPB0
VIBRATOR_ON
R1561 33R
R1563 150R
HT-210UD/NB
LED1501
ECN0009 - remove Q1501, Q1502, R1564, new values for R1561-3
BT_PIO5 moved here - ecn0001
BT_PIO5
Removed HP_IN net - ecn0010
Removed AMP_SHUTDOWN net - ecn0010
SC32442
U1501H
CAMERA
CAMDATA0/GPJ0
CAMDATA1/GPJ1
CAMDATA2/GPJ2
CAMDATA3/GPJ3
CAMDATA4/GPJ4
CAMDATA5/GPJ5
CAMDATA6/GPJ6
CAMDATA7/GPJ7
CAMPCLK/GPJ8
CAMVSYNC/GPJ9
CAMHREF/GPJ10
CAMCLKOUT/GPJ11
CAMRESET/GPJ12
MODEM_ON moved to PMU - ecn0030
Removed 3D_RST net - ecn0001
Removed DL_GSM net - ecn0030
WLAN_GPIO0
Removed KEEPACT net and R1546 - ecn0007
Removed SHUTDOWN net and R1545 - ecn0003
WLAN_DATA2
CHIP_PWD
WLAN_nRESET
IO_3V3
TP1532
Connect CLKOUT1 to UEXTCLK - ecn0025
EXT_CLK
C1515
1n5
C1516
820p
CLOCK
EXTCLK
CLKOUT0/nSPICS0/GPH9
CLKOUT1/GPH10
MPLLCAP
UPLLCAP
SC32442
U1501O
DEVICE CONTROL
XTIPLL
XTOPLL
XTIRTC
XTORTC
OM0
OM1
OM2
OM3
nBATT_FLT
PWREN
nRESET
nRSTOUT/GPA21
TP1523
OM0
10k R1515
NC R1514
R1518
0R
C1505
100n
X1501
TAS4025A
15p
C1511
15p
C1512
JTAG
nTRST
TCK
TDI
TDO
TMS
R1512
100k
R1513
100k
C1518
220p
nSTRST
STCK
STDI
STDO
STMS

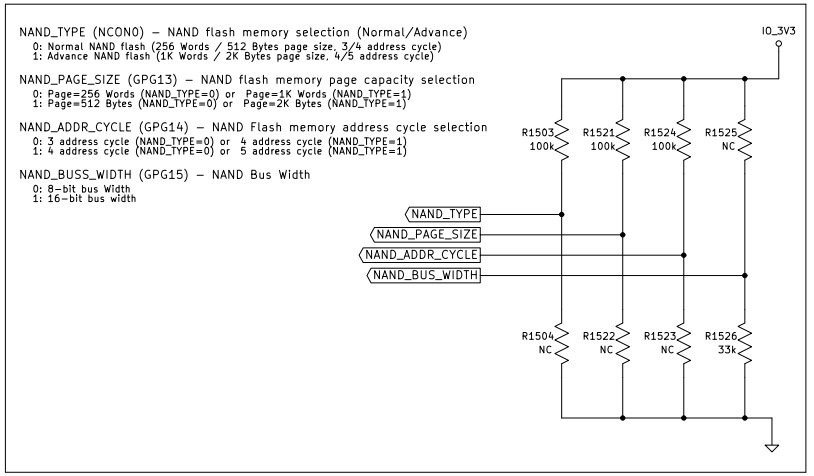
NAND_TYPE (NCON0) - NAND flash memory selection (Normal/Advance)
0: Normal NAND flash (256 Words / 512 Bytes page size, 3/4 address cycle)
1: Advance NAND flash (1K Words / 2K Bytes page size, 4/5 address cycle)
NAND_PAGE_SIZE (GPG13) - NAND flash memory page capacity selection
0: Page=256 Words (NAND_TYPE=0) or Page=1K Words (NAND_TYPE=1)
1: Page=512 Bytes (NAND_TYPE=0) or Page=2K Bytes (NAND_TYPE=1)
NAND_ADDR_CYCLE (GPG14) - NAND Flash memory address cycle selection
0: 3 address cycle (NAND_TYPE=0) or 4 address cycle (NAND_TYPE=1)
1: 4 address cycle (NAND_TYPE=0) or 5 address cycle (NAND_TYPE=1)
NAND_BUSS_WIDTH (GPG15) - NAND Bus Width
0: 8-bit bus Width
1: 16-bit bus width
IO_3V3
R1503 100k
R1521 100k
R1524 100k
R1525 NC
R1504 NC
R1522 NC
R1523 NC
R1526 33k
NAND_TYPE
NAND_PAGE_SIZE
NAND_ADDR_CYCLE
NAND_BUS_WIDTH

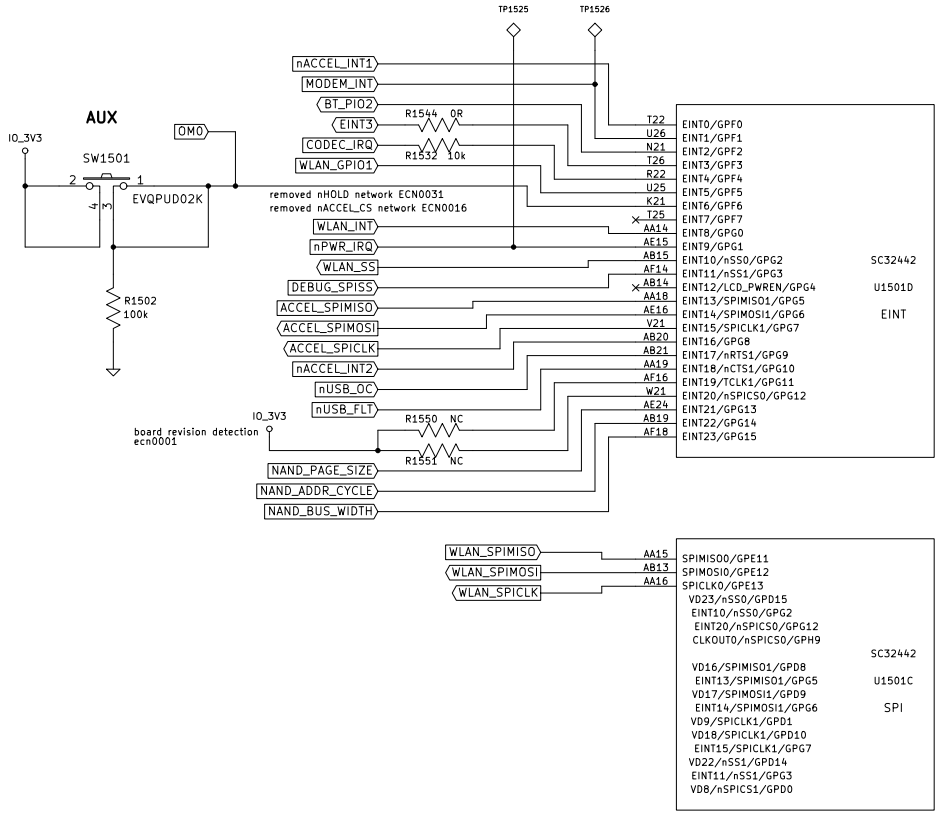
AUX
IO_3V3
SW1501
EVQPUD02K
OM0
R1502
100k
TP1525
TP1526
removed nHOLD network ECN0031
removed nACCEL_CS network ECN0016
nACCEL_INT1
MODEM_INT
BT_PIO2
EINT3
CODEC_IRQ
WLAN_GPIO1
R1544 0R
R1532 10k
WLAN_INT
nPWR_IRQ
WLAN_SS
DEBUG_SPISS
ACCEL_SPISMISO
ACCEL_SPISMOSI
ACCEL_SPICLK
nACCEL_INT2
nUSB_OC
nUSB_FLT
board revision detection ecn0001
R1550 NC
R1551 NC
NAND_PAGE_SIZE
NAND_ADDR_CYCLE
NAND_BUS_WIDTH
T22 EINT0/GPF0
U26 EINT1/GPF1
N21 EINT2/GPF2
T26 EINT3/GPF3
R22 EINT4/GPF4
U25 EINT5/GPF5
K21 EINT6/GPF6
T25 EINT7/GPF7
AA14 EINT8/GPG0
AE15 EINT9/GPG1
AB15 EINT10/nSS0/GPG2
AF14 EINT11/nSS1/GPG3
AB14 EINT12/LCD_PWREN/GPG4
AA18 EINT13/SPIMISO1/GPG5
AE16 EINT14/SPIMOSI1/GPG6
V21 EINT15/SPICLK1/GPG7
AB20 EINT16/GPG8
AB21 EINT17/nRTS1/GPG9
AA19 EINT18/nCTS1/GPG10
AF16 EINT19/TCLK1/GPG11
W21 EINT20/nSPICS0/GPG12
AE24 EINT21/GPG13
AB19 EINT22/GPG14
AF18 EINT23/GPG15
SC32442
U1501D
EINT
WLAN_SPIMISO
WLAN_SPIMOSI
WLAN_SPICLK
AA15
AB13
AA16
SPIMISO0/GPE11
SPIMOSI0/GPE12
SPICLK0/GPE13
VD23/nSS0/GPD15
EINT10/nSS0/GPG2
EINT20/nSPICS0/GPG12
CLKOUT0/nSPICS0/GPH9
VD16/SPIMISO1/GPD8
EINT13/SPIMISO1/GPG5
VD17/SPIMOSI1/GPD9
EINT14/SPIMOSI1/GPG6
VD9/SPICLK1/GPD1
VD18/SPICLK1/GPD10
EINT15/SPICLK1/GPG7
VD22/nSS1/GPD14
EINT11/nSS1/GPG3
VD8/nSPICS1/GPD0
SC32442
U1501C
SPI

CPU-POWER

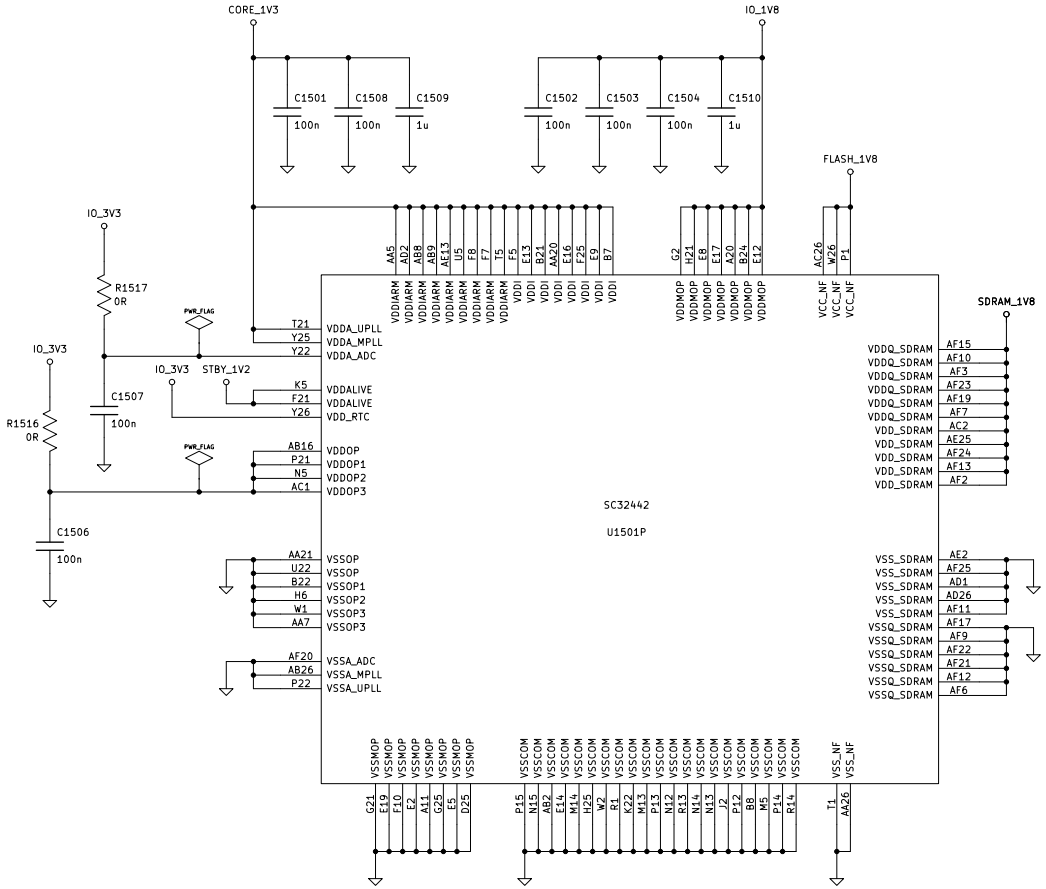
CORE_1V3
IO_1V8
C1501
100n
C1508
100n
C1509
1u
C1502
100n
C1503
100n
C1504
100n
C1510
1u
FLASH_1V8
IO_3V3
R1517
0R
PWR_FLAG
IO_3V3
R1516
0R
C1507
100n
IO_3V3
STBY_1V2
PWR_FLAG
C1506
100n
SC32442
U1501P
SDRAM_1V8
T21 VDDA_UPLL
Y25 VDDA_MPLL
Y22 VDDA_ADC
K5 VDDALIVE
F21 VDDALIVE
Y26 VDD_RTC
AB16 VDDOP
P21 VDDOP1
N5 VDDOP2
AC1 VDDOP3
AA21 VSSOP
U22 VSSOP
B22 VSSOP1
H6 VSSOP2
W1 VSSOP3
AA7 VSSOP3
AF20 VSSA_ADC
AB26 VSSA_MPLL
P22 VSSA_UPLL
VDDQ_SDRAM AF15
VDDQ_SDRAM AF10
VDDQ_SDRAM AF3
VDDQ_SDRAM AF23
VDDQ_SDRAM AF19
VDDQ_SDRAM AF7
VDD_SDRAM AC2
VDD_SDRAM AE25
VDD_SDRAM AF24
VDD_SDRAM AF13
VDD_SDRAM AF2
VSS_SDRAM AE2
VSS_SDRAM AF25
VSS_SDRAM AD1
VSS_SDRAM AD26
VSS_SDRAM AF11
VSS_SDRAM AF17
VSSQ_SDRAM AF9
VSSQ_SDRAM AF22
VSSQ_SDRAM AF21
VSSQ_SDRAM AF12
VSSQ_SDRAM AF6

PMU

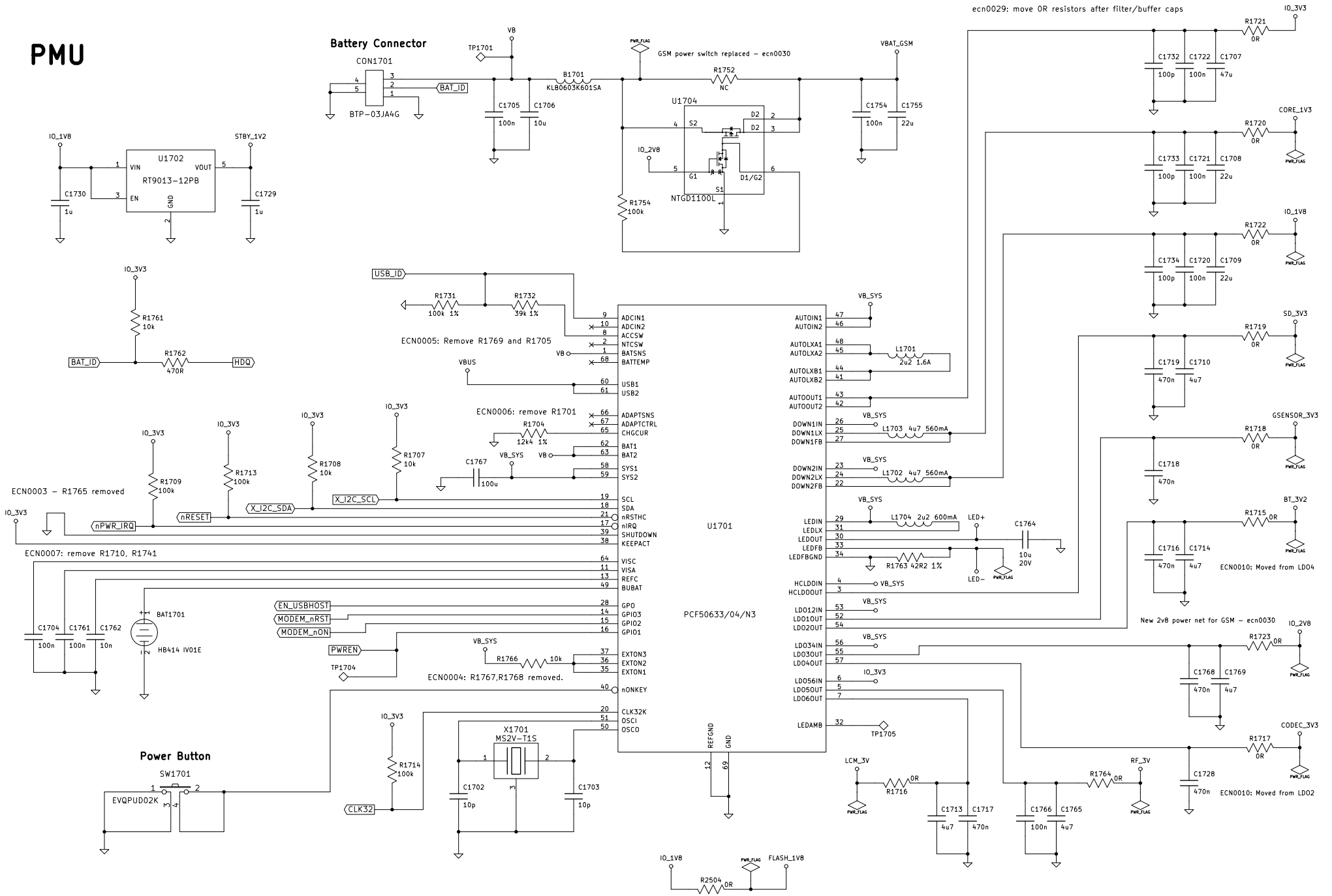
Battery Connector
CON1701
BTP-03JA4G
BAT_ID
TP1701
VB
B1701
KLB0603K6015A
C1705
100n
C1706
10u
PWR_FLAG
GSM power switch replaced – ecn0030
R1752
NC
VBAT_GSM
C1754
100n
C1755
22u
U1704
NTGD1100L
R1754
100k
IO_2V8
IO_1V8
U1702
RT9013-12PB
VIN
VOUT
EN
GND
C1730
1u
C1729
1u
STBY_1V2
ecn0029: move 0R resistors after filter/buffer caps
R1721
0R
C1732
100p
C1722
100n
C1707
47u
CORE_1V3
R1720
0R
C1733
100p
C1721
100n
C1708
22u
R1722
0R
C1734
100p
C1720
100n
C1709
22u
SD_3V3
R1719
0R
C1719
470n
C1710
4u7
GSENSOR_3V3
R1718
0R
C1718
470n
BT_3V2
R1715
0R
C1716
470n
C1714
4u7
ECN0010: Moved from LDO4
New 2v8 power net for GSM – ecn0030
R1723
0R
C1768
470n
C1769
4u7
CODEC_3V3
R1717
0R
C1728
470n
ECN0010: Moved from LDO2
R1761
10k
R1762
470R
BAT_ID
HDQ
USB_ID
R1731
100k 1%
R1732
39k 1%
ECN0005: Remove R1769 and R1705
VBUS
ECN0006: remove R1701
R1704
12k4 1%
C1767
100u
R1709
100k
R1713
100k
R1708
10k
R1707
10k
ECN0003 – R1765 removed
nPWR_IRQ
nRESET
X_I2C_SCL
X_I2C_SDA
ECN0007: remove R1710, R1741
C1704
100n
C1761
100n
C1762
10n
BAT1701
HB414 IV01E
EN_USBHOST
MODEM_nRST
MODEM_nON
PWREN
TP1704
R1766
10k
ECN0004: R1767,R1768 removed.
R1714
100k
CLK32
X1701
MS2V-T1S
C1702
10p
C1703
10p
Power Button
SW1701
EVQPUD02K
U1701
PCF50633/04/N3
ADCIN1
ADCIN2
ACCSW
NTCSW
BATSNS
BATTEMP
USB1
USB2
ADAPTSNS
ADAPTCTRL
CHGCUR
BAT1
BAT2
SYS1
SYS2
SCL
SDA
nRSTHC
nIRQ
SHUTDOWN
KEEPACT
VISC
VISA
REFC
BUBAT
GPO
GPIO3
GPIO2
GPIO1
EXTON3
EXTON2
EXTON1
nONKEY
CLK32K
OSCI
OSCO
REFGND
GND
AUTOIN1
AUTOIN2
AUTOLXA1
AUTOLXA2
AUTOLXB1
AUTOLXB2
AUTOOUT1
AUTOOUT2
L1701
2u2 1.6A
DOWN1IN
DOWN1LX
DOWN1FB
L1703 4u7 560mA
DOWN2IN
DOWN2LX
DOWN2FB
L1702 4u7 560mA
LEDIN
LEDLX
LEDOUT
LEDFB
LEDFBGND
L1704 2u2 600mA
R1763 42R2 1%
LED+
LED–
C1764
10u
20V
HCLDOIN
HCLDOOUT
LDO12IN
LDO01OUT
LDO02OUT
LDO34IN
LDO03OUT
LDO04OUT
LDO56IN
LDO05OUT
LDO06OUT
LEDAMB
TP1705
LCM_3V
R1716
0R
C1713
4u7
C1717
470n
C1766
100n
C1765
4u7
R1764
0R
RF_3V
R2504
0R
FLASH_1V8

MEMORY

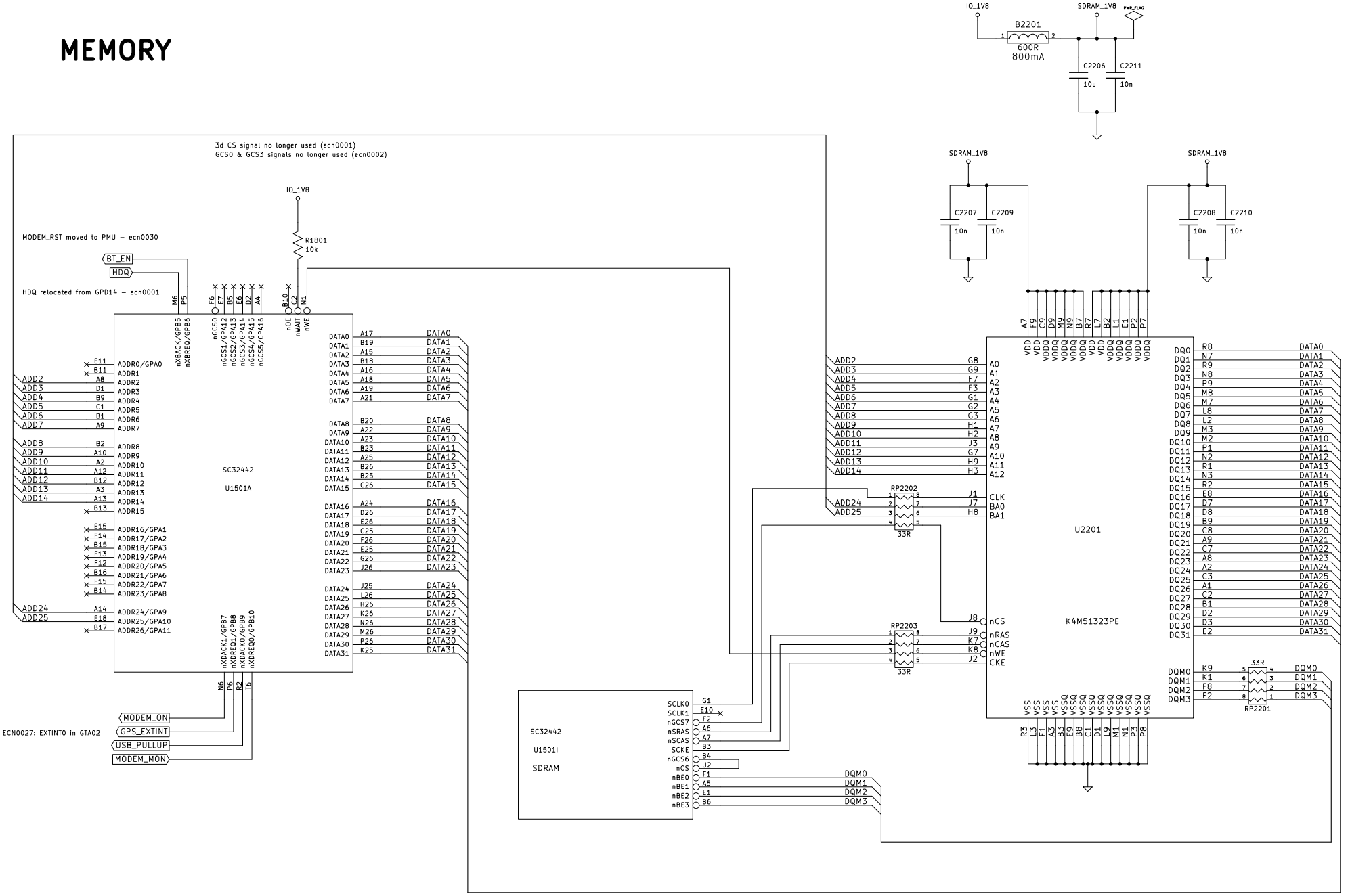
IO_1V8
B2201
600R
800mA
SDRAM_1V8
PWR_FLAG
C2206
10u
C2211
10n
C2207
10n
C2209
10n
C2208
10n
C2210
10n
3d_CS signal no longer used (ecn0001)
GCS0 & GCS3 signals no longer used (ecn0002)
MODEM_RST moved to PMU – ecn0030
HDQ relocated from GPD14 – ecn0001
R1801
10k
BT_EN
HDQ
SC32442
U1501A
SC32442
U1501I
SDRAM
U2201
K4M51323PE
RP2202
RP2203
RP2201
33R
MODEM_ON
GPS_EXTINT
USB_PULLUP
MODEM_MON
ECN0027: EXTINT0 in GTA02

AUDIO

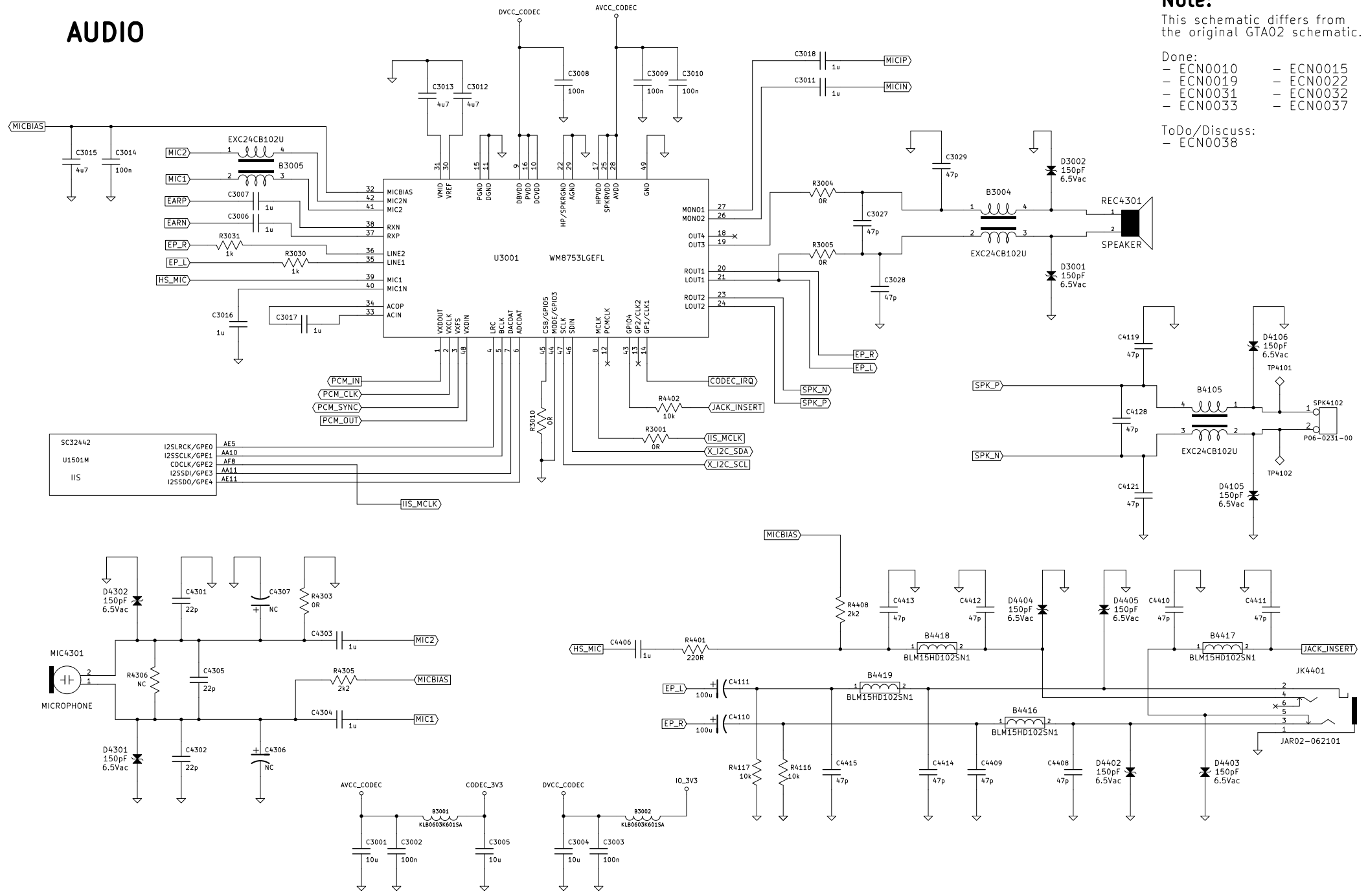

Note:

This schematic differs from the original GTA02 schematic.

Done:

- ECN0010
- ECN0015
- ECN0019
- ECN0022
- ECN0031
- ECN0032
- ECN0033
- ECN0037

ToDo/Discuss:

- ECN0038

USB

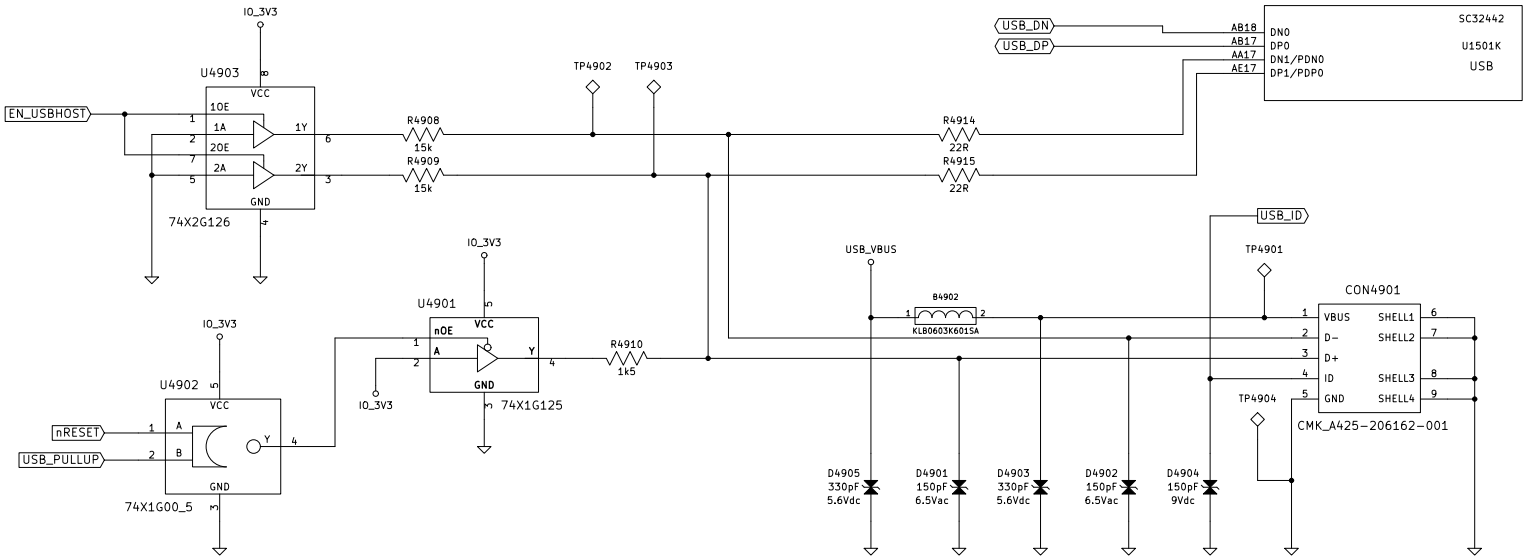
IO_3V3
U4903
VCC
10E
1A
2OE
2A
GND
1Y
2Y
74X2G126
EN_USBHOST
R4908
15k
R4909
15k
TP4902
TP4903
R4914
22R
R4915
22R
USB_DN
USB_DP
SC32442
U1501K
USB
AB18
AB17
AA17
AE17
DN0
DP0
DN1/PDN0
DP1/PDP0
U4901
nOE
A
Y
74X1G125
R4910
1k5
U4902
nRESET
USB_PULLUP
74X1G00_5
USB_VBUS
B4902
KLB0603K601SA
USB_ID
TP4901
TP4904
CON4901
VBUS
D-
D+
ID
GND
SHELL1
SHELL2
SHELL3
SHELL4
CMK_A425-206162-001
D4905
330pF
5.6Vdc
D4901
150pF
6.5Vac
D4903
330pF
5.6Vdc
D4902
150pF
6.5Vac
D4904
150pF
9Vdc

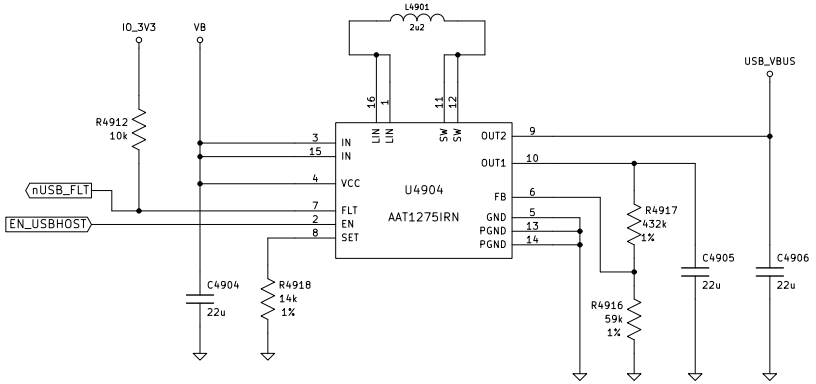
IO_3V3
VB
L4901
2u2
R4912
10k
nUSB_FLT
EN_USBHOST
U4904
AAT1275IRN
IN
IN
VCC
FLT
EN
SET
LIN
LIN
SW
SW
OUT2
OUT1
FB
GND
PGND
PGND
USB_VBUS
R4917
432k
1%
R4916
59k
1%
R4918
14k
1%
C4904
22u
C4905
22u
C4906
22u

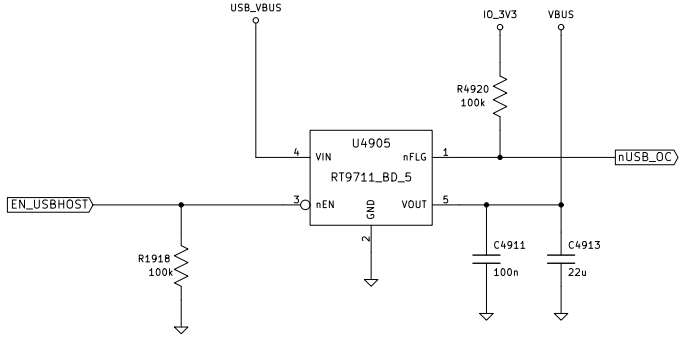
USB_VBUS
IO_3V3
VBUS
R4920
100k
U4905
RT9711_BD_5
VIN
nEN
GND
nFLG
VOUT
nUSB_OC
EN_USBHOST
R1918
100k
C4911
100n
C4913
22u

I/O

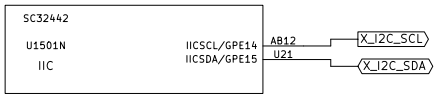
SC32442
U1501N
IIC
IICSCL/GPE14
IICSDA/GPE15
AB12
U21
X_I2C_SCL
X_I2C_SDA

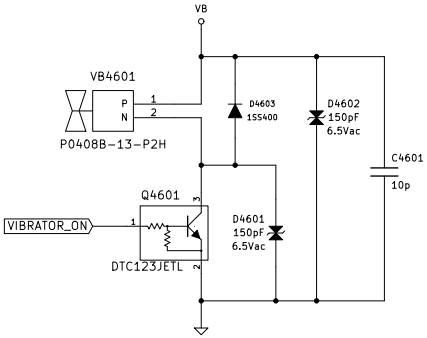
VB
VB4601
P
N
1
2
P0408B-13-P2H
D4603
1SS400
D4602
150pF
6.5Vac
C4601
10p
Q4601
VIBRATOR_ON
DTC123JETL
D4601
150pF
6.5Vac

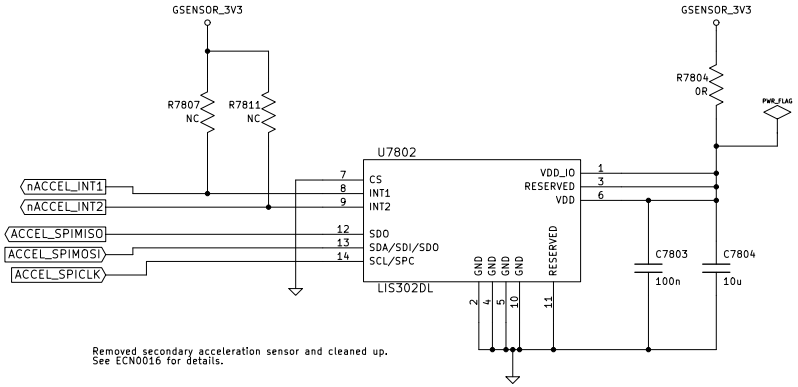
GSENSOR_3V3
R7807
NC
R7811
NC
U7802
nACCEL_INT1
nACCEL_INT2
ACCEL_SPIMISO
ACCEL_SPIMOSI
ACCEL_SPICLK
CS
INT1
INT2
SDO
SDA/SDI/SDO
SCL/SPC
LIS302DL
GND
GND
GND
GND
RESERVED
VDD_IO
RESERVED
VDD
GSENSOR_3V3
R7804
0R
PWR_FLAG
C7803
100n
C7804
10u
Removed secondary acceleration sensor and cleaned up.
See ECN0016 for details.

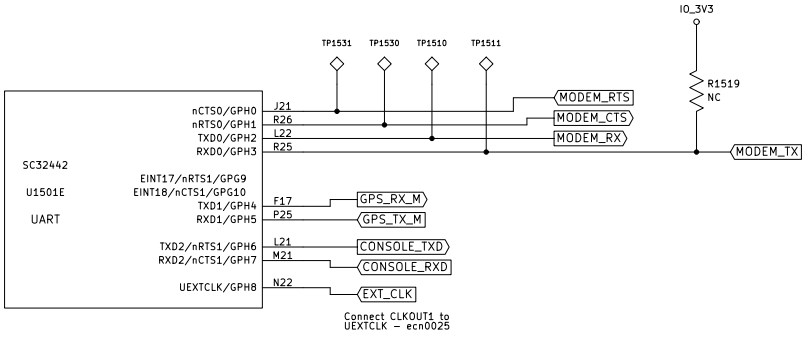
IO_3V3
R1519
NC
TP1531
TP1530
TP1510
TP1511
SC32442
U1501E
UART
nCTS0/GPH0
nRTS0/GPH1
TXD0/GPH2
RXD0/GPH3
EINT17/nRTS1/GPG9
EINT18/nCTS1/GPG10
TXD1/GPH4
RXD1/GPH5
TXD2/nRTS1/GPH6
RXD2/nCTS1/GPH7
UEXTCLK/GPH8
J21
R26
L22
R25
F17
P25
L21
M21
N22
MODEM_RTS
MODEM_CTS
MODEM_RX
MODEM_TX
GPS_RX_M
GPS_TX_M
CONSOLE_TXD
CONSOLE_RXD
EXT_CLK
Connect CLKOUT1 to
UEXTCLK - ecn0025

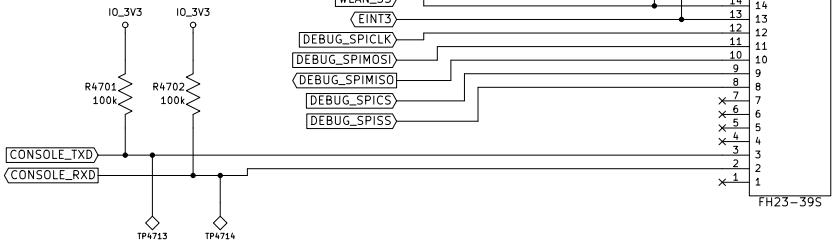
IO_3V3
IO_3V3
R4701
100k
R4702
100k
CONSOLE_TXD
CONSOLE_RXD
TP4713
TP4714

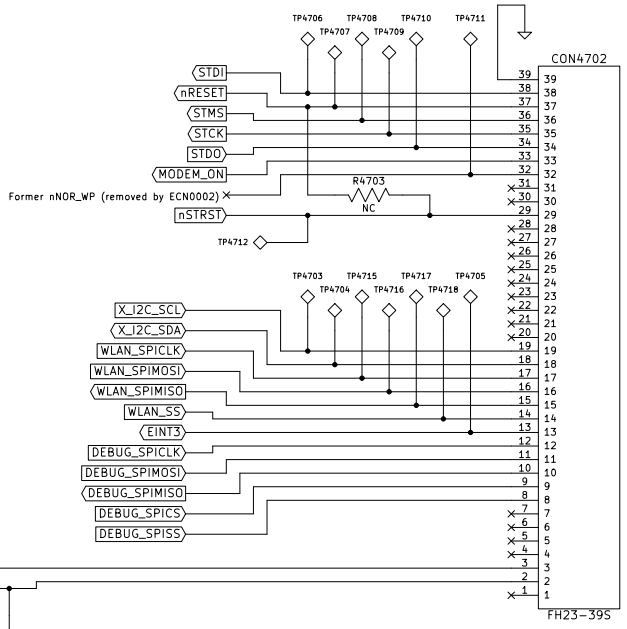
TP4706
TP4707
TP4708
TP4709
TP4710
TP4711
CON4702
STDI
nRESET
STMS
STCK
STDO
MODEM_ON
Former nNOR_WP (removed by ECN0002)
R4703
NC
nSTRST
TP4712
TP4703
TP4704
TP4715
TP4716
TP4717
TP4718
TP4705
X_I2C_SCL
X_I2C_SDA
WLAN_SPICLK
WLAN_SPIMOSI
WLAN_SPIMISO
WLAN_SS
EINT3
DEBUG_SPICLK
DEBUG_SPIMOSI
DEBUG_SPIMISO
DEBUG_SPICS
DEBUG_SPISS
FH23-39S

LCM

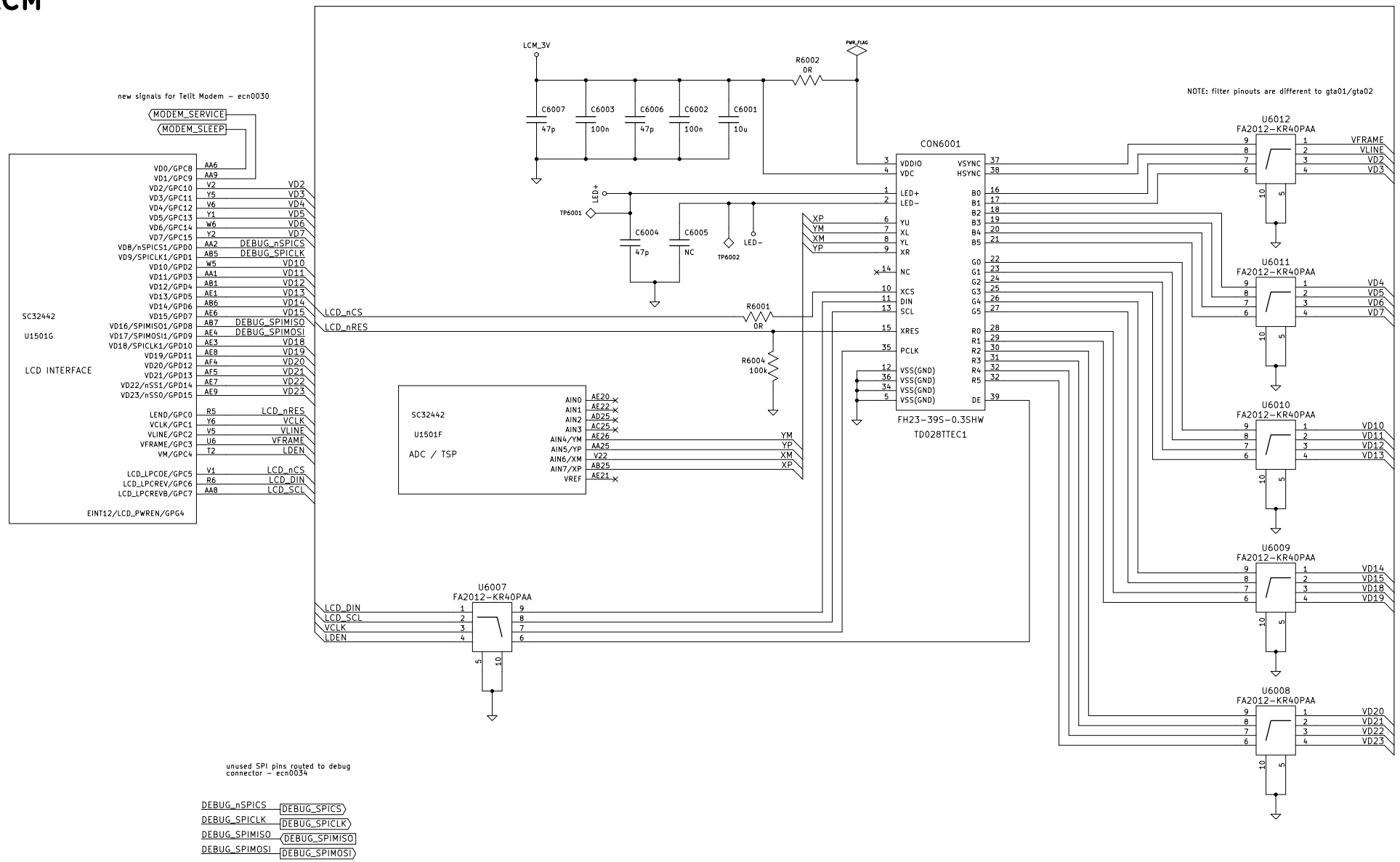
new signals for Telit Modem – ecn0030
MODEM_SERVICE
MODEM_SLEEP
SC32442
U1501G
LCD INTERFACE
VD0/GPC8 AA6
VD1/GPC9 AA9
VD2/GPC10 V2 VD2
VD3/GPC11 Y5 VD3
VD4/GPC12 V6 VD4
VD5/GPC13 Y1 VD5
VD6/GPC14 W6 VD6
VD7/GPC15 Y2 VD7
VD8/nSPICS1/GPD0 AA2 DEBUG_nSPICS
VD9/SPICLK1/GPD1 AB5 DEBUG_SPICLK
VD10/GPD2 W5 VD10
VD11/GPD3 AA1 VD11
VD12/GPD4 AB1 VD12
VD13/GPD5 AE1 VD13
VD14/GPD6 AB6 VD14
VD15/GPD7 AE6 VD15
VD16/SPIMISO1/GPD8 AB7 DEBUG_SPIMISO
VD17/SPIMOSI1/GPD9 AE4 DEBUG_SPIMOSI
VD18/SPICLK1/GPD10 AE3 VD18
VD19/GPD11 AE8 VD19
VD20/GPD12 AF4 VD20
VD21/GPD13 AF5 VD21
VD22/nSS1/GPD14 AE7 VD22
VD23/nSS0/GPD15 AE9 VD23
LEND/GPC0 R5 LCD_nRES
VCLK/GPC1 Y6 VCLK
VLINE/GPC2 V5 VLINE
VFRAME/GPC3 U6 VFRAME
VM/GPC4 T2 LDEN
LCD_LPCOE/GPC5 V1 LCD_nCS
LCD_LPCREV/GPC6 R6 LCD_DIN
LCD_LPCREVB/GPC7 AA8 LCD_SCL
EINT12/LCD_PWREN/GPG4
LCD_nCS
LCD_nRES
LCM_3V
PWR_FLAG
R6002 0R
C6007 47p
C6003 100n
C6006 47p
C6002 100n
C6001 10u
LED+
TP6001
C6004 47p
C6005 NC
TP6002
LED–
R6001 0R
R6004 100k
CON6001
VDDIO 3
VDC 4
LED+ 1
LED– 2
YU 6
XL 7
YL 8
XR 9
NC 14
XCS 10
DIN 11
SCL 13
XRES 15
PCLK 35
VSS(GND) 12
VSS(GND) 36
VSS(GND) 34
VSS(GND) 5
VSYNC 37
HSYNC 38
DE 39
B0 16
B1 17
B2 18
B3 19
B4 20
B5 21
G0 22
G1 23
G2 24
G3 25
G4 26
G5 27
R0 28
R1 29
R2 30
R3 31
R4 32
R5 32
FH23-39S-0.3SHW
TD028TTEC1
XP
YM
XM
YP
SC32442
U1501F
ADC / TSP
AIN0 AE20
AIN1 AE22
AIN2 AD25
AIN3 AC25
AIN4/YM AE26
AIN5/YP AA25
AIN6/XM V22
AIN7/XP AB25
VREF AE21
YM
YP
XM
XP
U6007
FA2012-KR40PAA
LCD_DIN
LCD_SCL
VCLK
LDEN
NOTE: filter pinouts are different to gta01/gta02
U6012
FA2012-KR40PAA
VFRAME
VLINE
VD2
VD3
U6011
FA2012-KR40PAA
VD4
VD5
VD6
VD7
U6010
FA2012-KR40PAA
VD10
VD11
VD12
VD13
U6009
FA2012-KR40PAA
VD14
VD15
VD18
VD19
U6008
FA2012-KR40PAA
VD20
VD21
VD22
VD23
unused SPI pins routed to debug connector – ecn0034
DEBUG_nSPICS DEBUG_SPICS
DEBUG_SPICLK DEBUG_SPICLK
DEBUG_SPIMISO DEBUG_SPIMISO
DEBUG_SPIMOSI DEBUG_SPIMOSI

SD CARD / SIM

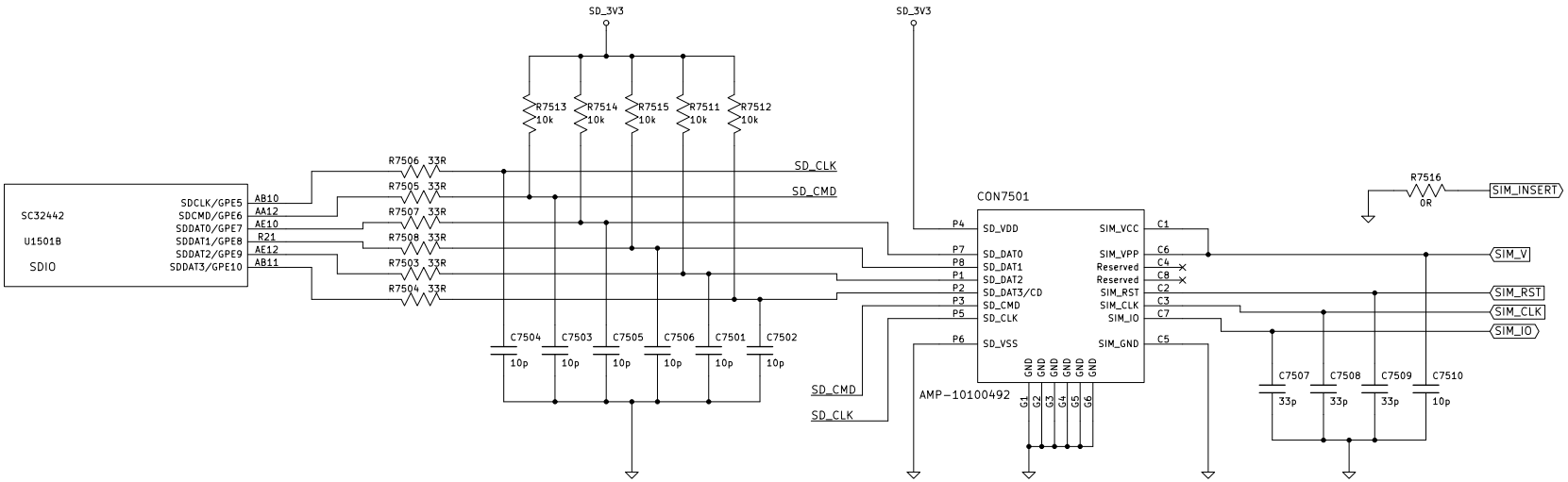
SD_3V3
SD_3V3
R7513 10k
R7514 10k
R7515 10k
R7511 10k
R7512 10k
SC32442
U1501B
SDIO
SDCLK/GPE5
SDCMD/GPE6
SDDAT0/GPE7
SDDAT1/GPE8
SDDAT2/GPE9
SDDAT3/GPE10
AB10
AA12
AE10
R21
AE12
AB11
R7506 33R
R7505 33R
R7507 33R
R7508 33R
R7503 33R
R7504 33R
SD_CLK
SD_CMD
C7504 10p
C7503 10p
C7505 10p
C7506 10p
C7501 10p
C7502 10p
CON7501
P4 SD_VDD
P7 SD_DAT0
P8 SD_DAT1
P1 SD_DAT2
P2 SD_DAT3/CD
P3 SD_CMD
P5 SD_CLK
P6 SD_VSS
SIM_VCC C1
SIM_VPP C6
Reserved C4
Reserved C8
SIM_RST C2
SIM_CLK C3
SIM_IO C7
SIM_GND C5
GND G1 G2 G3 G4 G5 G6
AMP-10100492
SD_CMD
SD_CLK
R7516 0R
SIM_INSERT
SIM_V
SIM_RST
SIM_CLK
SIM_IO
C7507 33p
C7508 33p
C7509 33p
C7510 10p

GPS

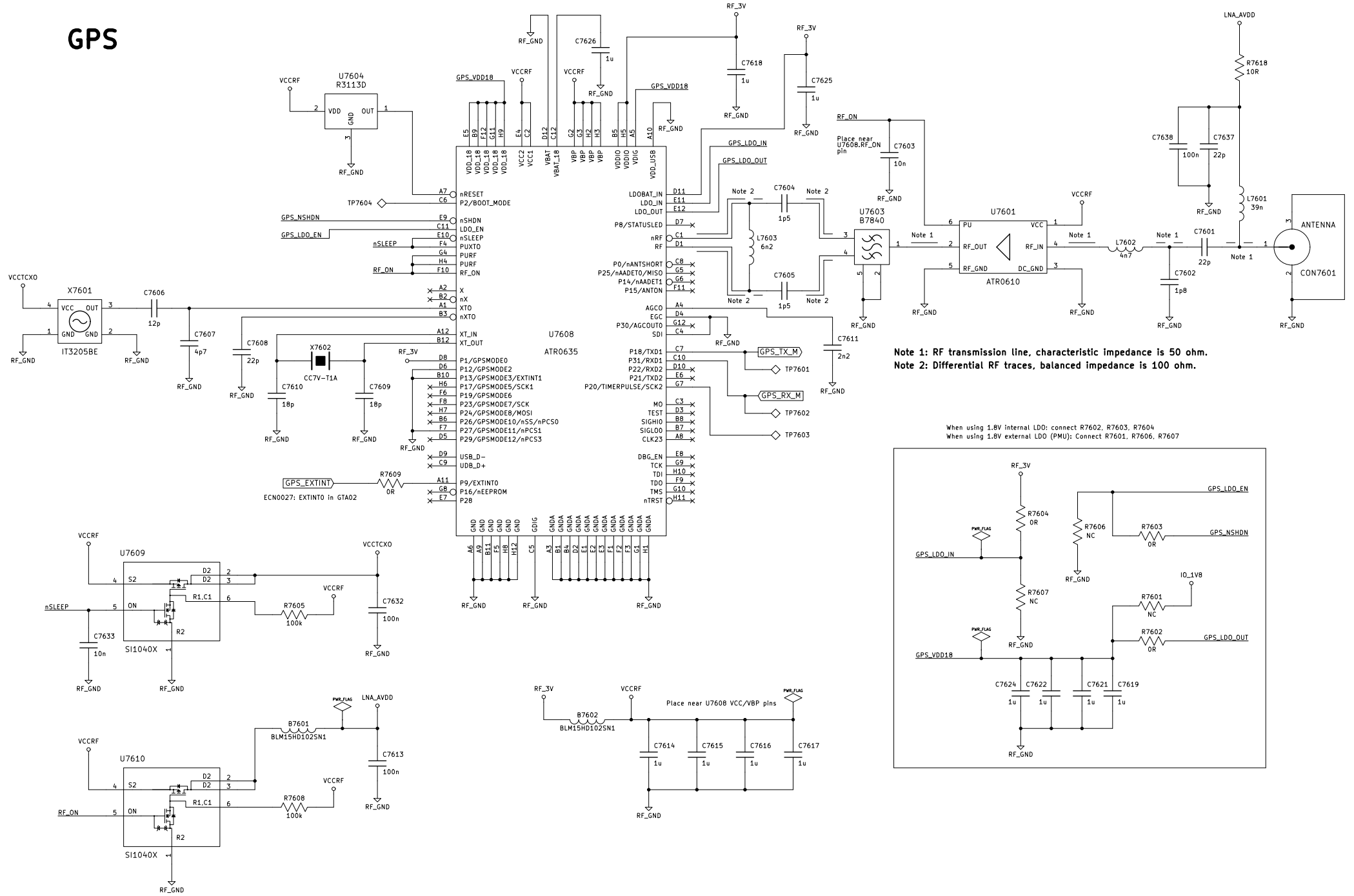

Note 1: RF transmission line, characteristic impedance is 50 ohm.
Note 2: Differential RF traces, balanced impedance is 100 ohm.

When using 1.8V internal LDO: connect R7602, R7603, R7604
When using 1.8V external LDO (PMU): Connect R7601, R7606, R7607

BLUETOOTH

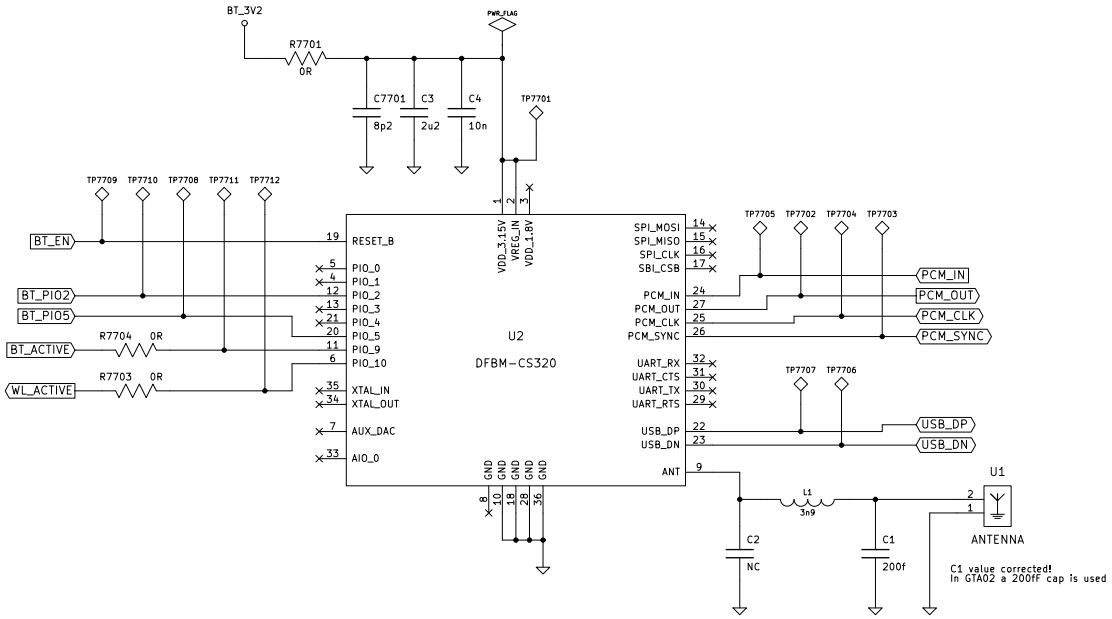
BT_3V2
PWR_FLAG
R7701
0R
C7701
8p2
C3
2u2
C4
10n
TP7701
TP7709
TP7710
TP7708
TP7711
TP7712
BT_EN
BT_PIO2
BT_PIO5
BT_ACTIVE
WL_ACTIVE
R7704 0R
R7703 0R
RESET_B
PIO_0
PIO_1
PIO_2
PIO_3
PIO_4
PIO_5
PIO_9
PIO_10
XTAL_IN
XTAL_OUT
AUX_DAC
AIO_0
VDD_3.15V
VREG_IN
VDD_1.8V
GND
U2
DFBM-CS320
SPI_MOSI
SPI_MISO
SPI_CLK
SBI_CSB
PCM_IN
PCM_OUT
PCM_CLK
PCM_SYNC
UART_RX
UART_CTS
UART_TX
UART_RTS
USB_DP
USB_DN
ANT
TP7705
TP7702
TP7704
TP7703
TP7707
TP7706
L1
3n9
U1
ANTENNA
C2
NC
C1
200f
C1 value corrected!
In GTA02 a 200fF cap is used

WLAN

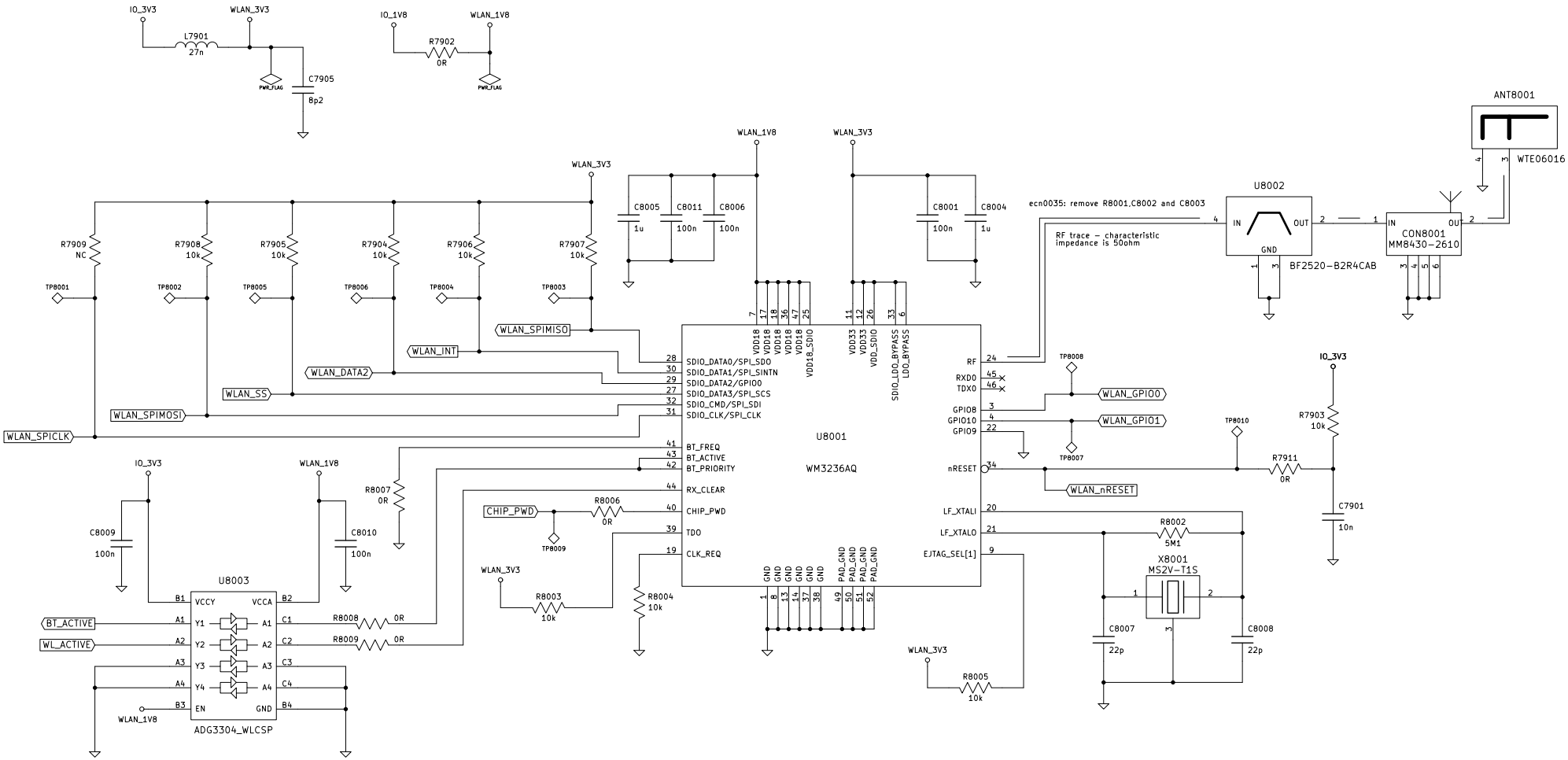
IO_3V3
WLAN_3V3
L7901
27n
C7905
8p2
PWR_FLAG
IO_1V8
WLAN_1V8
R7902
0R
ANT8001
WTE06016
U8002
ecn0035: remove R8001,C8002 and C8003
RF trace – characteristic impedance is 50ohm
IN
OUT
GND
BF2520-B2R4CAB
CON8001
MM8430-2610
R7909 NC
R7908 10k
R7905 10k
R7904 10k
R7906 10k
R7907 10k
C8005 1u
C8011 100n
C8006 100n
C8001 100n
C8004 1u
TP8001
TP8002
TP8005
TP8006
TP8004
TP8003
WLAN_SPIMISO
WLAN_INT
WLAN_DATA2
WLAN_SS
WLAN_SPIMOSI
WLAN_SPICLK
SDIO_DATA0/SPI_SDO
SDIO_DATA1/SPI_SINTN
SDIO_DATA2/GPIO0
SDIO_DATA3/SPI_SCS
SDIO_CMD/SPI_SDI
SDIO_CLK/SPI_CLK
BT_FREQ
BT_ACTIVE
BT_PRIORITY
RX_CLEAR
CHIP_PWD
TDO
CLK_REQ
VDD18
VDD18_SDIO
VDD33
VDD_SDIO
SDIO_LDO_BYPASS
LDO_BYPASS
GND
PAD_GND
U8001
WM3236AQ
RF
RXD0
TDX0
GPIO8
GPIO10
GPIO9
nRESET
LF_XTALI
LF_XTALO
EJTAG_SEL[1]
TP8008
TP8007
TP8010
WLAN_GPIO0
WLAN_GPIO1
WLAN_nRESET
R7903 10k
R7911 0R
C7901 10n
R8002 5M1
X8001
MS2V-T1S
C8007 22p
C8008 22p
R8007 0R
R8006 0R
CHIP_PWD
TP8009
R8003 10k
R8004 10k
R8005 10k
C8009 100n
C8010 100n
U8003
ADG3304_WLCSP
VCCY
VCCA
EN
BT_ACTIVE
WL_ACTIVE
R8008 0R
R8009 0R

MODEM

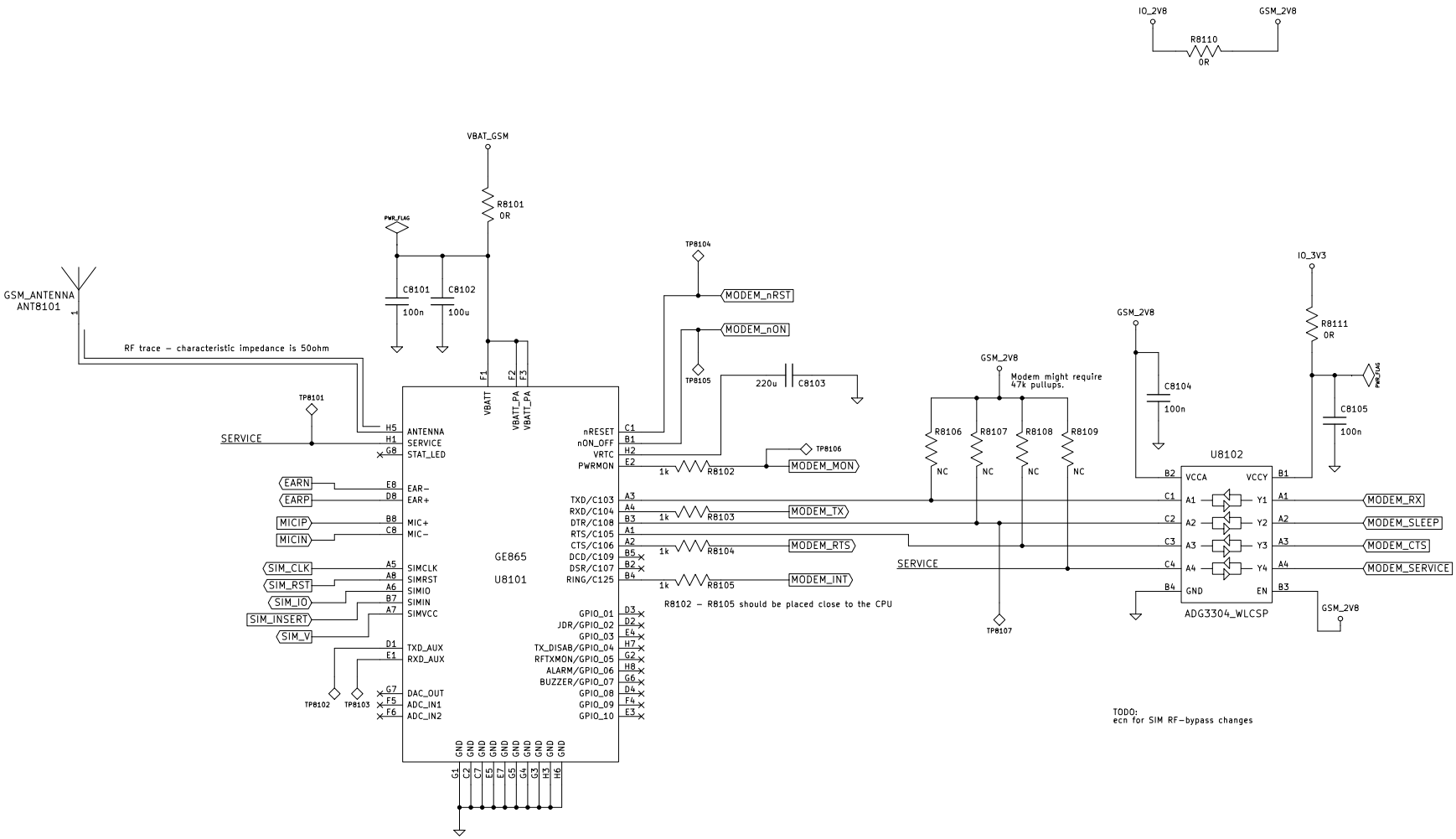
IO_2V8
GSM_2V8
R8110
0R
VBAT_GSM
R8101
0R
PWR_FLAG
C8101
100n
C8102
100u
GSM_ANTENNA
ANT8101
RF trace – characteristic impedance is 50ohm
TP8104
MODEM_nRST
MODEM_nON
TP8105
220u
C8103
F1
F2
F3
VBATT
VBATT_PA
VBATT_PA
TP8101
SERVICE
H5 ANTENNA
H1 SERVICE
G8 STAT_LED
EARN
EARP
E8 EAR–
D8 EAR+
MICIP
MICIN
B8 MIC+
C8 MIC–
SIM_CLK
SIM_RST
SIM_IO
SIM_INSERT
SIM_V
A5 SIMCLK
A8 SIMRST
A6 SIMIO
B7 SIMIN
A7 SIMVCC
D1 TXD_AUX
E1 RXD_AUX
G7 DAC_OUT
F5 ADC_IN1
F6 ADC_IN2
TP8102
TP8103
GE865
U8101
nRESET C1
nON_OFF B1
VRTC H2
PWRMON E2
TP8106
MODEM_MON
1k R8102
TXD/C103 A3
RXD/C104 A4
DTR/C108 B3
RTS/C105 A1
CTS/C106 A2
DCD/C109 B5
DSR/C107 B2
RING/C125 B4
1k R8103
MODEM_TX
1k R8104
MODEM_RTS
1k R8105
MODEM_INT
R8102 – R8105 should be placed close to the CPU
GPIO_01 D3
JDR/GPIO_02 D2
GPIO_03 E4
TX_DISAB/GPIO_04 H7
RFTXMON/GPIO_05 G2
ALARM/GPIO_06 H8
BUZZER/GPIO_07 G6
GPIO_08 D4
GPIO_09 F4
GPIO_10 E3
GND
G1 G2 C7 E5 E7 G5 G4 G3 H3 H6
GSM_2V8
Modem might require 47k pullups.
R8106
R8107
R8108
R8109
NC
SERVICE
TP8107
GSM_2V8
C8104
100n
IO_3V3
R8111
0R
C8105
100n
U8102
VCCA B2
VCCY B1
A1 C1
A2 C2
A3 C3
A4 C4
Y1 A1
Y2 A2
Y3 A3
Y4 A4
GND B4
EN B3
ADG3304_WLCSP
MODEM_RX
MODEM_SLEEP
MODEM_CTS
MODEM_SERVICE
GSM_2V8
TODO:
ecn for SIM RF–bypass changes