ANNOTATED VIEW – FOR BOM REVIEW

CPU
15xx
R2502
cpu-bom.sch

CPU-POWER
15xx
cpu-power-bom.sch

PMU
17xx
R2504
pmu-bom.sch

MEMORY
22xx
U1501
R1801
memory-bom.sch

AUDIO
30xx
41xx
43xx
44xx
U1501
audio-bom.sch

USB
49xx
U1501
R1918
usb-bom.sch

IO
46xx
47xx
78xx
15xx
io-bom.sch

LCM
60xx
U1501
lcm-bom.sch

SD-SIM
75xx
U1501
sd-sim-bom.sch

GPS
76xx
gps-bom.sch

BT
77xx
x
bt-bom.sch

WLAN
80xx
wlan-bom.sch

MODEM
81xx
modem-bom.sch

CPU

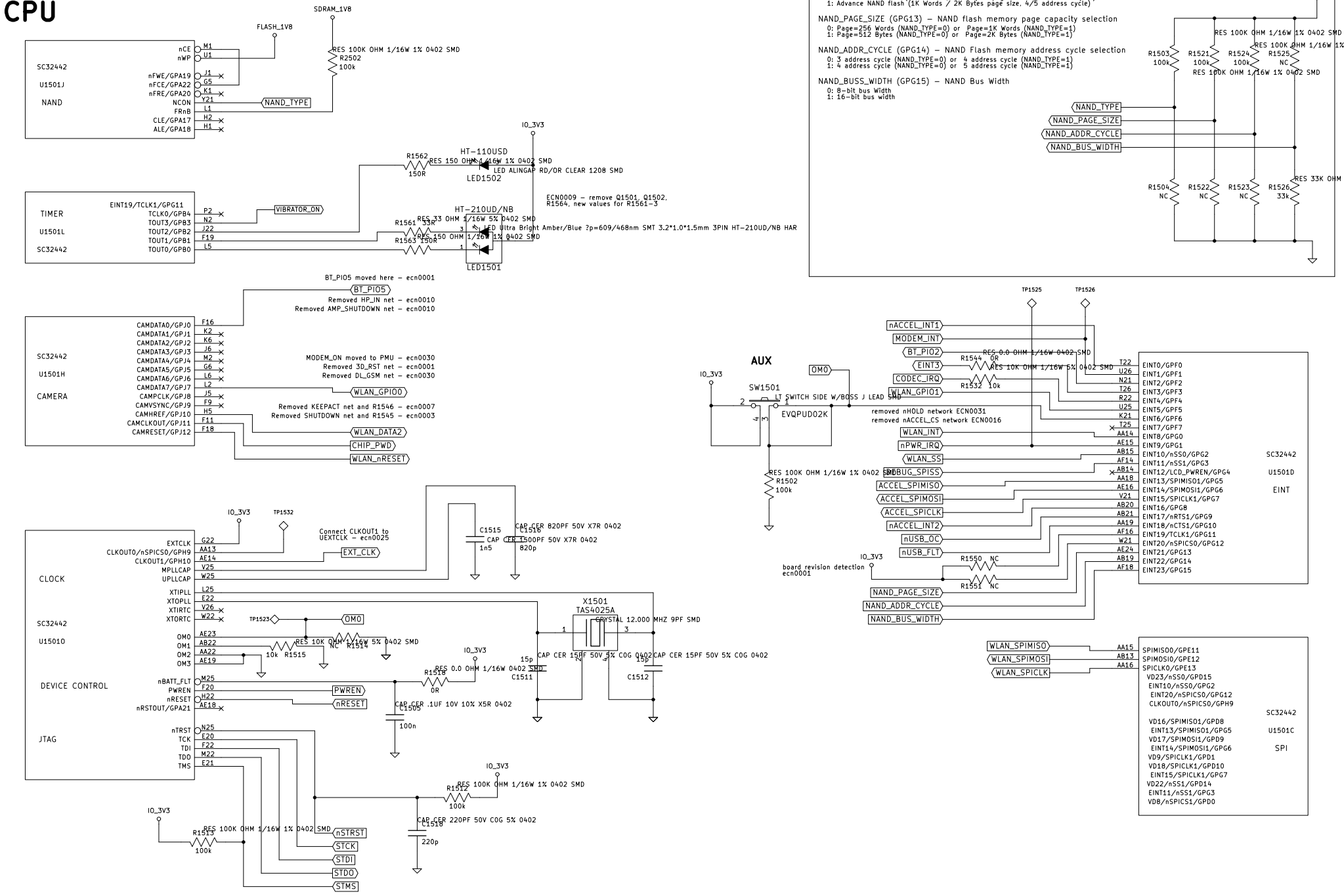
SC32442
U1501J
NAND
nCE
nWP
nFWE/GPA19
nFCE/GPA22
nFRE/GPA20
NCON
FRnB
CLE/GPA17
ALE/GPA18
FLASH_1V8
SDRAM_1V8
RES 100K OHM 1/16W 1% 0402 SMD
R2502
100k
NAND_TYPE
TIMER
U1501L
SC32442
EINT19/TCLK1/GPG11
TCLK0/GPB4
TOUT3/GPB3
TOUT2/GPB2
TOUT1/GPB1
TOUT0/GPB0
VIBRATOR_ON
R1562
150R
RES 150 OHM 1/16W 1% 0402 SMD
HT-110USD
LED1502
LED ALINGAP RD/OR CLEAR 1208 SMD
IO_3V3
ECN0009 - remove Q1501, Q1502, R1564, new values for R1561-3
HT-210UD/NB
R1561 33R
RES 33 OHM 1/16W 5% 0402 SMD
R1563 150R
RES 150 OHM 1/16W 1% 0402 SMD
LED Ultra Bright Amber/Blue ?p=609/468nm SMT 3.2*1.0*1.5mm 3PIN HT-210UD/NB HAR
LED1501
BT_PIO5 moved here - ecn0001
BT_PIO5
Removed HP_IN net - ecn0010
Removed AMP_SHUTDOWN net - ecn0010
SC32442
U1501H
CAMERA
CAMDATA0/GPJ0
CAMDATA1/GPJ1
CAMDATA2/GPJ2
CAMDATA3/GPJ3
CAMDATA4/GPJ4
CAMDATA5/GPJ5
CAMDATA6/GPJ6
CAMDATA7/GPJ7
CAMPCLK/GPJ8
CAMVSYNC/GPJ9
CAMHREF/GPJ10
CAMCLKOUT/GPJ11
CAMRESET/GPJ12
MODEM_ON moved to PMU - ecn0030
Removed 3D_RST net - ecn0001
Removed DL_GSM net - ecn0030
WLAN_GPIO0
Removed KEEPACT net and R1546 - ecn0007
Removed SHUTDOWN net and R1545 - ecn0003
WLAN_DATA2
CHIP_PWD
WLAN_nRESET
CLOCK
SC32442
U1501O
EXTCLK
CLKOUT0/nSPICS0/GPH9
CLKOUT1/GPH10
MPLLCAP
UPLLCAP
XTIPLL
XTOPLL
XTIRTC
XTORTC
IO_3V3
TP1532
Connect CLKOUT1 to UEXTCLK - ecn0025
EXT_CLK
C1515
1n5
CAP CER 1500PF 50V X7R 0402
C1516
CAP CER 820PF 50V X7R 0402
820p
TP1523
OM0
OM1
OM2
OM3
RES 10K OHM 1/16W 5% 0402 SMD
R1514
NC
R1515
10k
DEVICE CONTROL
nBATT_FLT
PWREN
nRESET
nRSTOUT/GPA21
PWREN
nRESET
R1510
RES 0.0 OHM 1/16W 0402 SMD
0R
CAP CER .1UF 10V 10% X5R 0402
C1509
100n
X1501
TAS4025A
CRYSTAL 12.000 MHZ 9PF SMD
15p
C1511
CAP CER 15PF 50V 5% C0G 0402
C1512
CAP CER 15PF 50V 5% C0G 0402
JTAG
nTRST
TCK
TDI
TDO
TMS
R1512
100k
RES 100K OHM 1/16W 1% 0402 SMD
C1518
CAP CER 220PF 50V C0G 5% 0402
220p
R1513
100k
RES 100K OHM 1/16W 1% 0402 SMD
nSTRST
STCK
STDI
STDO
STMS
NAND_TYPE (NCON0) - NAND flash memory selection (Normal/Advance)
0: Normal NAND flash (256 Words / 512 Bytes page size, 3/4 address cycle)
1: Advance NAND flash (1K Words / 2K Bytes page size, 4/5 address cycle)
NAND_PAGE_SIZE (GPG13) - NAND flash memory page capacity selection
0: Page=256 Words (NAND_TYPE=0) or Page=1K Words (NAND_TYPE=1)
1: Page=512 Bytes (NAND_TYPE=0) or Page=2K Bytes (NAND_TYPE=1)
NAND_ADDR_CYCLE (GPG14) - NAND Flash memory address cycle selection
0: 3 address cycle (NAND_TYPE=0) or 4 address cycle (NAND_TYPE=1)
1: 4 address cycle (NAND_TYPE=0) or 5 address cycle (NAND_TYPE=1)
NAND_BUSS_WIDTH (GPG15) - NAND Bus Width
0: 8-bit bus Width
1: 16-bit bus width
IO_3V3
RES 100K OHM 1/16W 1% 0402 SMD
R1503 100k
R1521 100k
R1524 100k
R1525 NC
R1504 NC
R1522 NC
R1523 NC
R1526 33k
RES 33K OHM
NAND_PAGE_SIZE
NAND_ADDR_CYCLE
NAND_BUS_WIDTH
AUX
IO_3V3
SW1501
EVQPUD02K
LT SWITCH SIDE W/BOSS J LEAD SMD
OM0
R1502
100k
RES 100K OHM 1/16W 1% 0402 SMD
TP1525
TP1526
nACCEL_INT1
MODEM_INT
BT_PIO2
EINT3
CODEC_IRQ
WLAN_GPIO1
RES 0.0 OHM 1/16W 0402 SMD
R1544 0R
RES 10K OHM 1/16W 5% 0402 SMD
R1532 10k
removed nHOLD network ECN0031
removed nACCEL_CS network ECN0016
WLAN_INT
nPWR_IRQ
WLAN_SS
DEBUG_SPISS
ACCEL_SPIMISO
ACCEL_SPIMOSI
ACCEL_SPICLK
nACCEL_INT2
nUSB_OC
nUSB_FLT
IO_3V3
board revision detection ecn0001
R1550 NC
R1551 NC
NAND_PAGE_SIZE
NAND_ADDR_CYCLE
NAND_BUS_WIDTH
EINT0/GPF0
EINT1/GPF1
EINT2/GPF2
EINT3/GPF3
EINT4/GPF4
EINT5/GPF5
EINT6/GPF6
EINT7/GPF7
EINT8/GPG0
EINT9/GPG1
EINT10/nSS0/GPG2
EINT11/nSS1/GPG3
EINT12/LCD_PWREN/GPG4
EINT13/SPIMISO1/GPG5
EINT14/SPIMOSI1/GPG6
EINT15/SPICLK1/GPG7
EINT16/GPG8
EINT17/nRTS1/GPG9
EINT18/nCTS1/GPG10
EINT19/TCLK1/GPG11
EINT20/nSPICS0/GPG12
EINT21/GPG13
EINT22/GPG14
EINT23/GPG15
SC32442
U1501D
EINT
WLAN_SPIMISO
WLAN_SPIMOSI
WLAN_SPICLK
SPIMISO0/GPE11
SPIMOSI0/GPE12
SPICLK0/GPE13
VD23/nSS0/GPD15
EINT10/nSS0/GPG2
EINT20/nSPICS0/GPG12
CLKOUT0/nSPICS0/GPH9
VD16/SPIMISO1/GPD8
EINT13/SPIMISO1/GPG5
VD17/SPIMOSI1/GPD9
EINT14/SPIMOSI1/GPG6
VD9/SPICLK1/GPD1
VD18/SPICLK1/GPD10
EINT15/SPICLK1/GPG7
VD22/nSS1/GPD14
EINT11/nSS1/GPG3
VD8/nSPICS1/GPD0
SC32442
U1501C
SPI

CPU-POWER

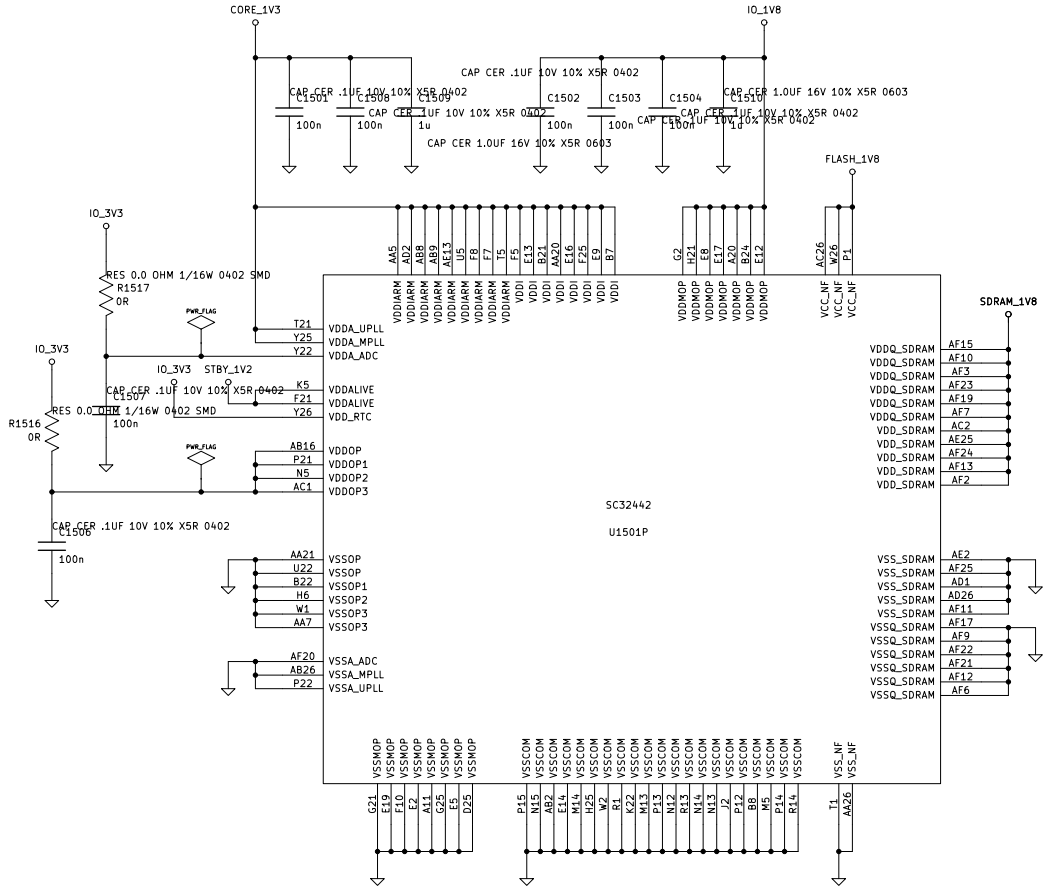
CORE_1V3
IO_1V8
CAP CER .1UF 10V 10% X5R 0402
C1501
100n
C1508
100n
C1509
1u
CAP CER 1.0UF 16V 10% X5R 0603
C1502
100n
C1503
100n
C1504
100n
C1510
1u
FLASH_1V8
IO_3V3
R1517
0R
RES 0.0 OHM 1/16W 0402 SMD
PWR_FLAG
IO_3V3
STBY_1V2
C1507
100n
R1516
0R
C1506
100n
SDRAM_1V8
SC32442
U1501P
VDDA_UPLL
VDDA_MPLL
VDDA_ADC
VDDALIVE
VDD_RTC
VDDOP
VDDOP1
VDDOP2
VDDOP3
VSSOP
VSSOP1
VSSOP2
VSSOP3
VSSA_ADC
VSSA_MPLL
VSSA_UPLL
VDDQ_SDRAM
VDD_SDRAM
VSS_SDRAM
VSSQ_SDRAM
VDDIARM
VDDI
VDDOMP
VCC_NF
VSSMOP
VSSCOM
VSS_NF

PMU

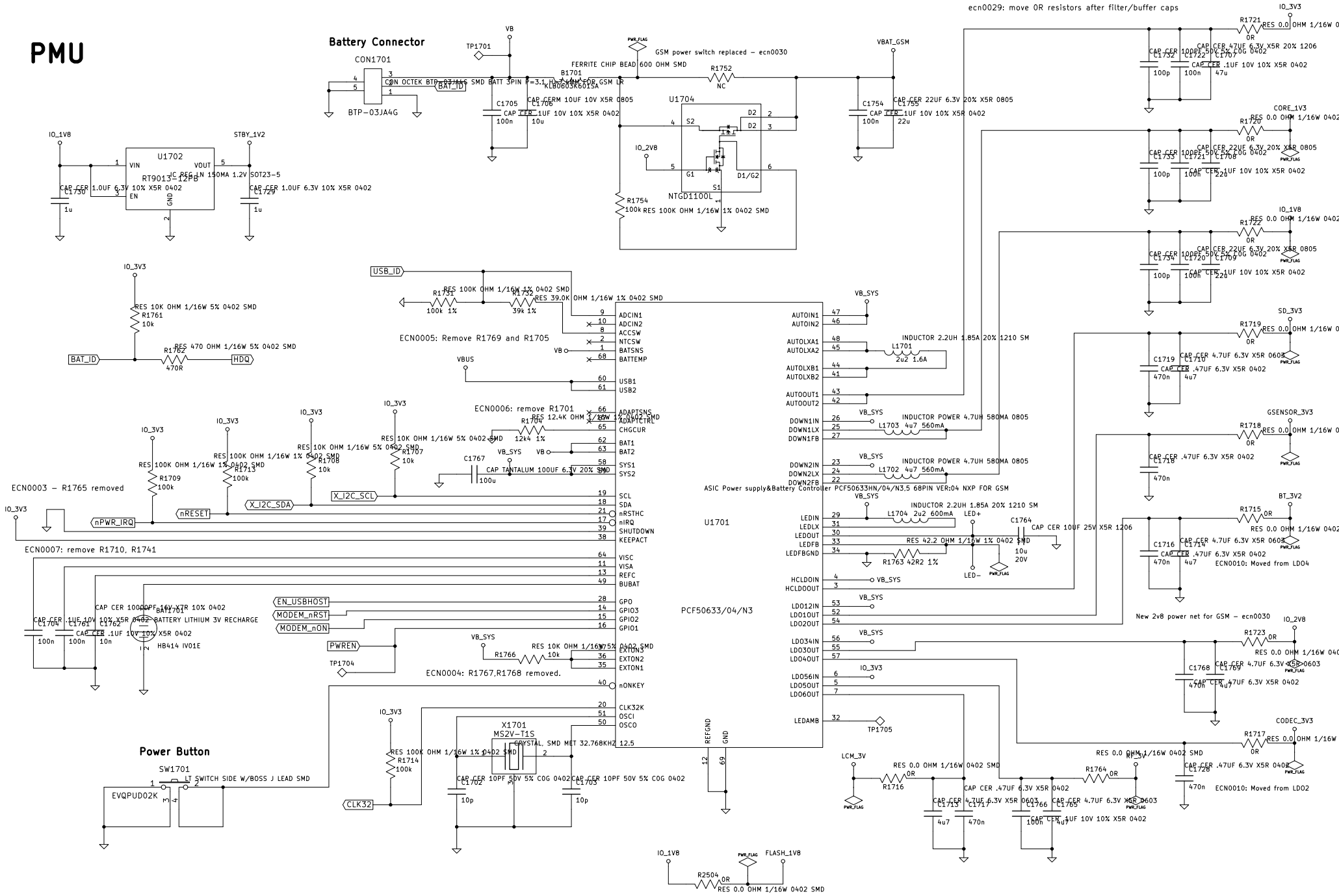
Battery Connector
CON1701
BTP-03JA4G
CON OCTEK BTP-03JA4G SMD BATT 3PIN P=3.1 H=7.4MM FOR GSM LR
BAT_ID
TP1701
VB
B1701
KLB0603K601SA
FERRITE CHIP BEAD 600 OHM SMD
GSM power switch replaced – ecn0030
R1752
NC
VBAT_GSM
U1704
NTGD1100L
R1754
100k
RES 100K OHM 1/16W 1% 0402 SMD
ecn0029: move 0R resistors after filter/buffer caps
IO_1V8
U1702
RT9013-12PB
STBY_1V2
IO_2V8
IO_3V3
USB_ID
R1751
100k 1%
R1752
39k 1%
RES 100K OHM 1/16W 1% 0402 SMD
RES 39.0K OHM 1/16W 1% 0402 SMD
ECN0005: Remove R1769 and R1705
RES 10K OHM 1/16W 5% 0402 SMD
R1761
10k
BAT_ID
R1762
470R
RES 470 OHM 1/16W 5% 0402 SMD
HDQ
VBUS
ECN0006: remove R1701
R1701
12k4 1%
RES 12.4K OHM 1/16W 1% 0402 SMD
C1767
100u
CAP TANTALUM 100UF 6.3V 20% SMD
ECN0003 – R1765 removed
R1709
100k
R1713
100k
R1708
10k
R1707
10k
X_I2C_SCL
X_I2C_SDA
nRESET
nPWR_IRQ
ECN0007: remove R1710, R1741
BAT1701
BATTERY LITHIUM 3V RECHARGE
HB414 IV01E
EN_USBHOST
MODEM_nRST
MODEM_nON
PWREN
TP1704
R1766
10k
ECN0004: R1767,R1768 removed.
X1701
MS2V-T1S
CRYSTAL, SMD MET 32.768KHZ
R1714
100k
CLK32
Power Button
SW1701
EVQPUD02K
LT SWITCH SIDE W/BOSS J LEAD SMD
ADCIN1
ADCIN2
ACCSW
NTCSW
BATSNS
BATTEMP
USB1
USB2
ADAPTSNS
ADAPTCTRL
CHGCUR
BAT1
BAT2
SYS1
SYS2
SCL
SDA
nRSTHC
nIRQ
SHUTDOWN
KEEPACT
VISC
VISA
REFC
BUBAT
GPO
GPIO3
GPIO2
GPIO1
EXTON3
EXTON2
EXTON1
nONKEY
CLK32K
OSCI
OSCO
REFGND
GND
U1701
PCF50633/04/N3
AUTOIN1
AUTOIN2
AUTOLXA1
AUTOLXA2
AUTOLXB1
AUTOLXB2
AUTOOUT1
AUTOOUT2
DOWN1IN
DOWN1LX
DOWN1FB
DOWN2IN
DOWN2LX
DOWN2FB
LEDIN
LEDLX
LEDOUT
LEDFB
LEDFBGND
HCLDOIN
HCLDOOUT
LDO12IN
LDO10UT
LDO20UT
LDO34IN
LDO30UT
LDO40UT
LDO56IN
LDO50UT
LDO60UT
LEDAMB
TP1705
ASIC Power supply&Battery Controller PCF50633HN/04/N3,5 68PIN VER:04 NXP FOR GSM
L1701
2u2 1.6A
INDUCTOR 2.2UH 1.85A 20% 1210 SM
L1703 4u7 560mA
INDUCTOR POWER 4.7UH 580MA 0805
L1702 4u7 560mA
L1704 2u2 600mA
INDUCTOR 2.2UH 1.85A 20% 1210 SM
LED+
LED–
C1764
10u
20V
CAP CER 10UF 25V X5R 1206
R1763 42R2 1%
RES 42.2 OHM 1/16W 1% 0402 SMD
New 2v8 power net for GSM – ecn0030
ECN0010: Moved from LDO4
ECN0010: Moved from LDO2
LCM_3V
R1716
R1764
R1721
R1722
R1719
R1718
R1715
R1723
R1717
CORE_1V3
SD_3V3
GSENSOR_3V3
BT_3V2
CODEC_3V3
R2504
FLASH_1V8
PWR_FLAG

MEMORY

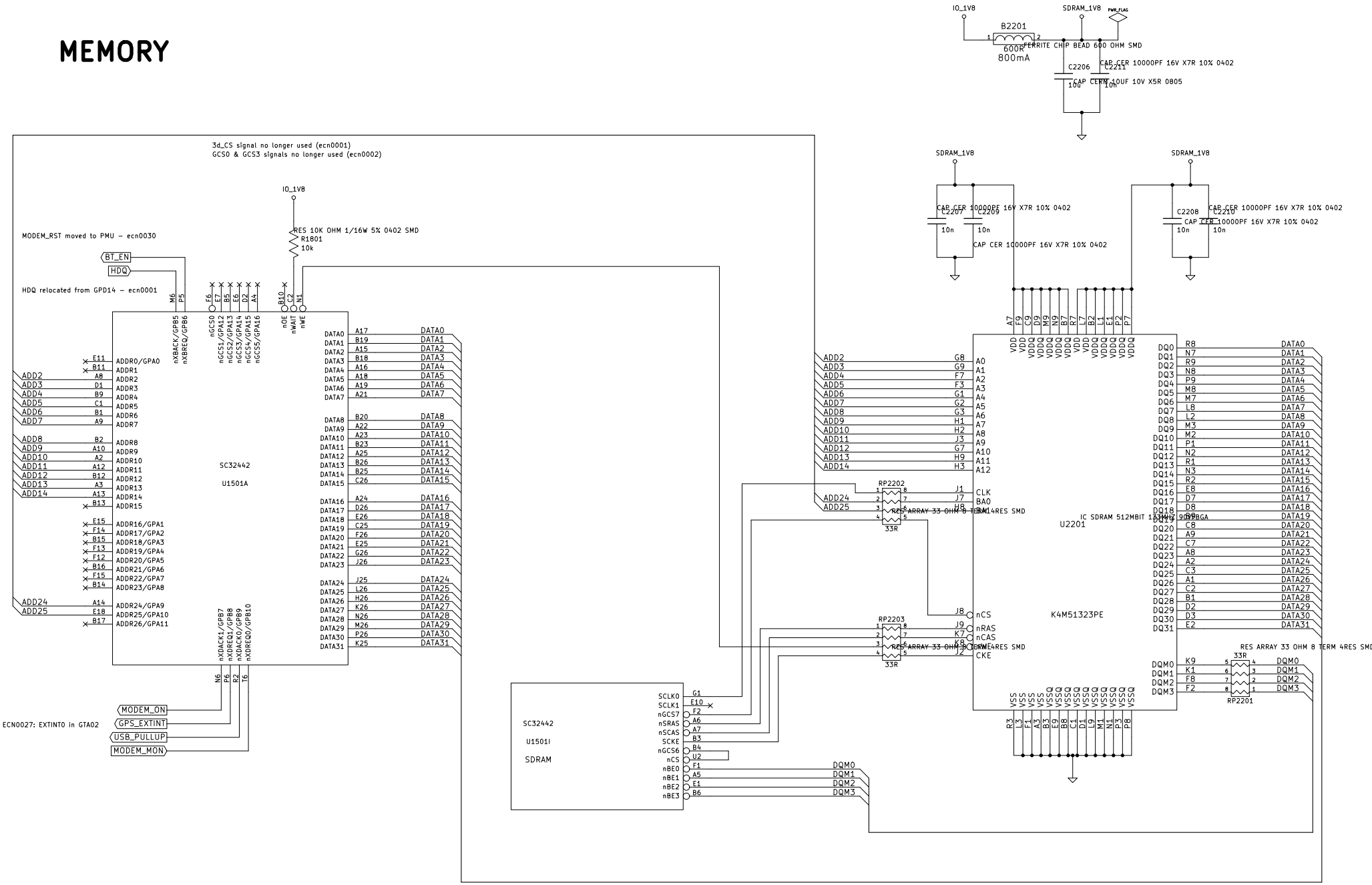
IO_1V8
B2201
600R
800mA
FERRITE CHIP BEAD 600 OHM SMD
SDRAM_1V8
PWR_FLAG
C2206
100
C2211
10n
CAP CER 10000PF 16V X7R 10% 0402
CAP CERM 10UF 10V X5R 0805
3d_CS signal no longer used (ecn0001)
GCS0 & GCS3 signals no longer used (ecn0002)
MODEM_RST moved to PMU – ecn0030
HDQ relocated from GPD14 – ecn0001
BT_EN
HDQ
RES 10K OHM 1/16W 5% 0402 SMD
R1801
10k
SC32442
U1501A
SC32442
U1501I
SDRAM
MODEM_ON
GPS_EXTINT
USB_PULLUP
MODEM_MON
ECN0027: EXTINT0 in GTA02
C2207
C2209
C2208
C2210
RP2202
RP2203
33R
RES ARRAY 33 OHM 8 TERM 4RES SMD
RP2201
U2201
IC SDRAM 512MBIT 133MHZ 90FBGA
K4M51323PE

AUDIO

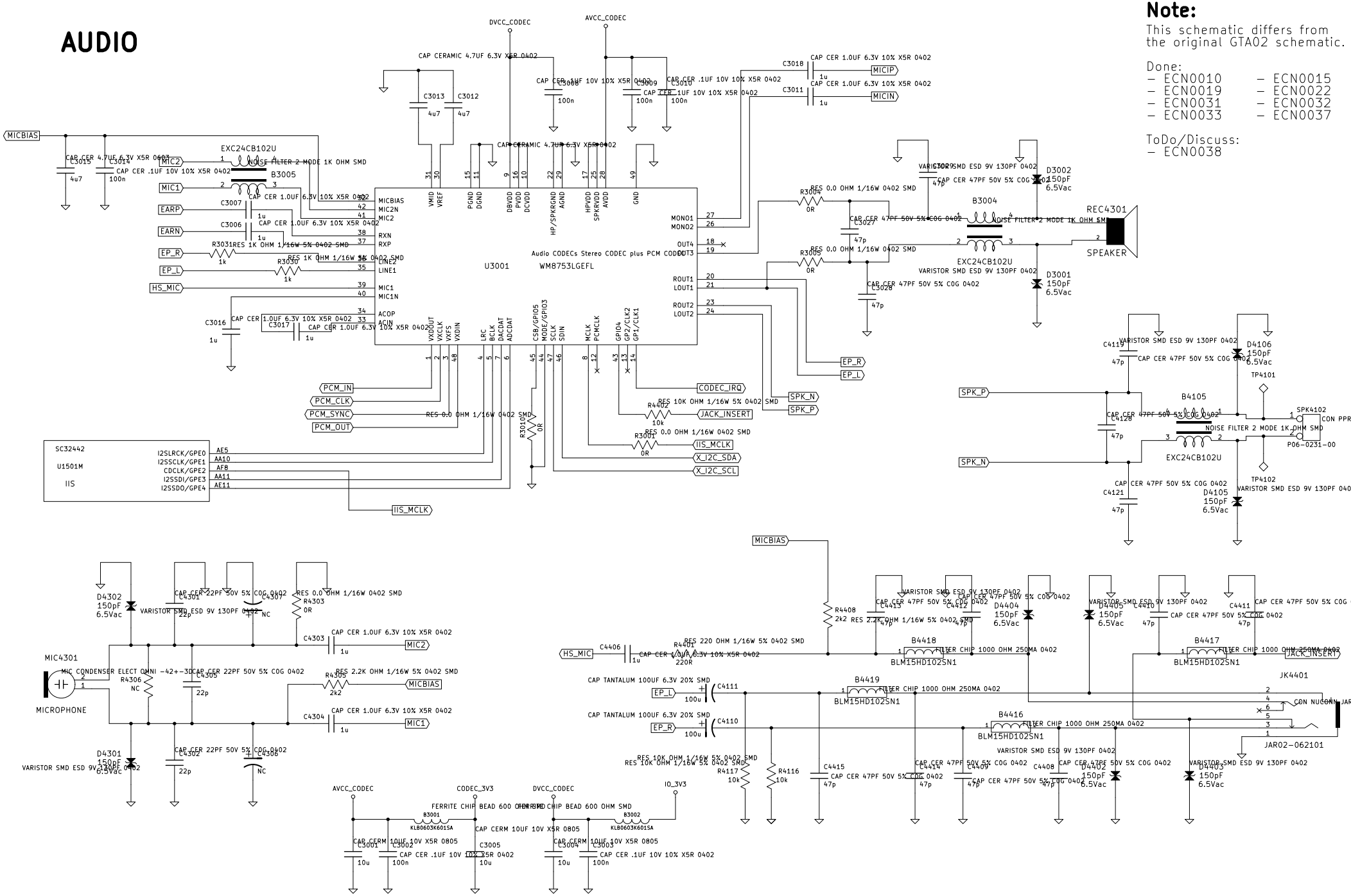

Note:

This schematic differs from the original GTA02 schematic.

Done:
- ECN0010
- ECN0015
- ECN0019
- ECN0022
- ECN0031
- ECN0032
- ECN0033
- ECN0037

ToDo/Discuss:
- ECN0038

USB

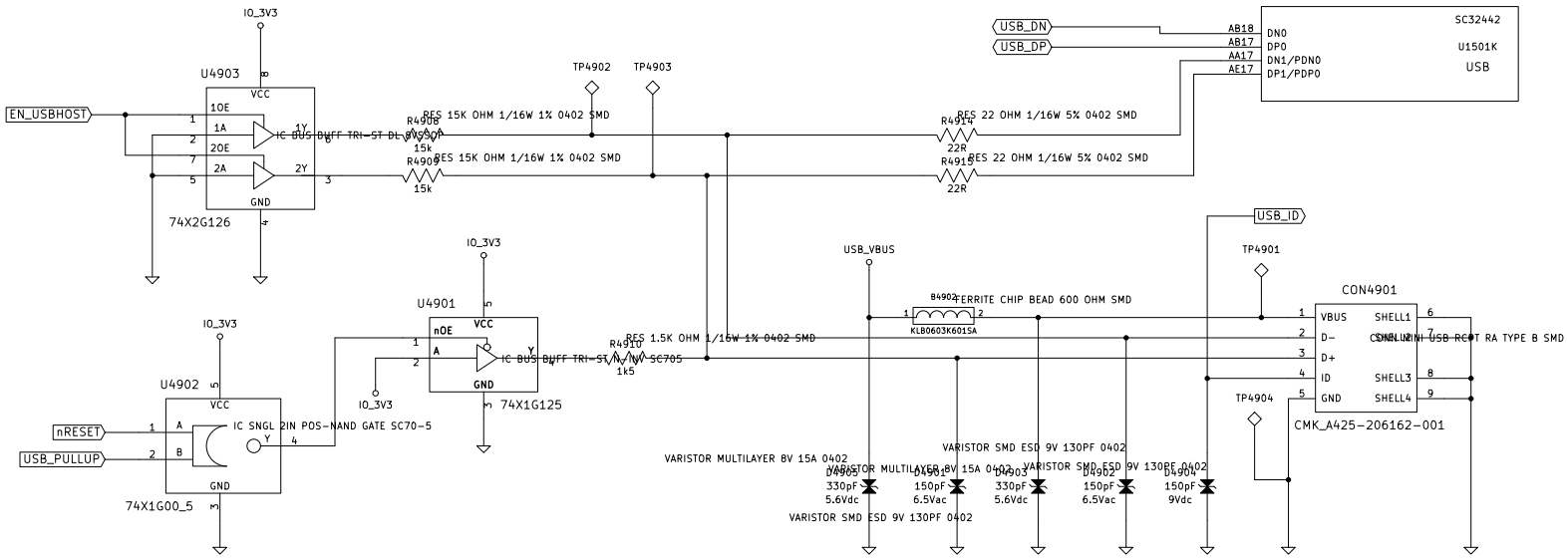
IO_3V3
U4903
VCC
10E
1A
1Y
2OE
2A
2Y
GND
74X2G126
IC BUS BUFF TRI-ST DL SSOP
EN_USBHOST
R4908
15k
R4909
15k
RES 15K OHM 1/16W 1% 0402 SMD
TP4902
TP4903
USB_DN
USB_DP
AB18
AB17
AA17
AE17
DN0
DP0
DN1/PDN0
DP1/PDP0
SC32442
U1501K
USB
R4914
22R
R4915
22R
RES 22 OHM 1/16W 5% 0402 SMD
USB_ID
TP4901
USB_VBUS
B4902
FERRITE CHIP BEAD 600 OHM SMD
KLB0603K601SA
CON4901
VBUS
D-
D+
ID
GND
SHELL1
SHELL2
SHELL3
SHELL4
CONN-UNIV USB RCPT RA TYPE B SMD
CMK_A425-206162-001
TP4904
U4901
nOE
VCC
A
Y
GND
74X1G125
IC BUS BUFF TRI-ST N/INV SC705
R4910
1k5
RES 1.5K OHM 1/16W 1% 0402 SMD
U4902
nRESET
USB_PULLUP
74X1G00_5
IC SNGL 2IN POS-NAND GATE SC70-5
VARISTOR MULTILAYER 8V 15A 0402
VARISTOR SMD ESD 9V 130PF 0402
D4905
330pF
5.6Vdc
D4901
150pF
6.5Vac
D4903
330pF
5.6Vdc
D4902
150pF
6.5Vac
D4904
150pF
9Vdc

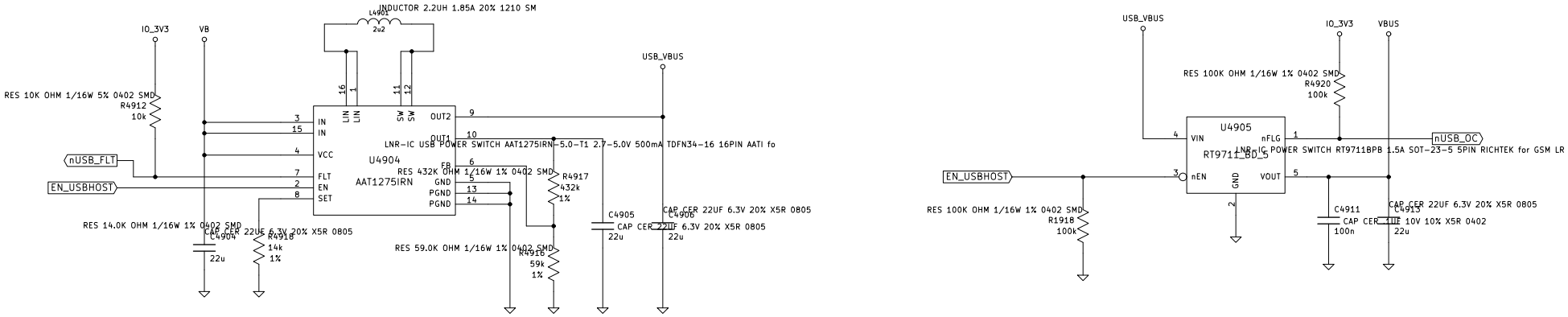
IO_3V3
VB
INDUCTOR 2.2UH 1.85A 20% 1210 SM
L4901
2u2
RES 10K OHM 1/16W 5% 0402 SMD
R4912
10k
nUSB_FLT
EN_USBHOST
IN
VCC
FLT
EN
SET
LIN
SW
OUT2
OUT1
FB
GND
PGND
U4904
AAT1275IRN
LNR-IC USB POWER SWITCH AAT1275IRN-5.0-T1 2.7-5.0V 500mA TDFN34-16 16PIN AATI fo
RES 432K OHM 1/16W 1% 0402 SMD
R4917
432k
1%
USB_VBUS
C4905
22u
CAP CER 22UF 6.3V 20% X5R 0805
C4906
22u
CAP CER 22UF 6.3V 20% X5R 0805
RES 14.0K OHM 1/16W 1% 0402 SMD
C4904
22u
CAP CER 22UF 6.3V 20% X5R 0805
R4918
14k
1%
RES 59.0K OHM 1/16W 1% 0402 SMD
R4916
59k
1%
RES 100K OHM 1/16W 1% 0402 SMD
R4920
100k
U4905
VIN
nFLG
nEN
GND
VOUT
RT9711_BD_5
LNR-IC POWER SWITCH RT9711BPB 1.5A SOT-23-5 5PIN RICHTEK for GSM LR
nUSB_OC
EN_USBHOST
RES 100K OHM 1/16W 1% 0402 SMD
R1918
100k
C4911
100n
C4913
22u
CAP CER 22UF 6.3V 20% X5R 0805
CAP CER 22UF 10V 10% X5R 0402

I/O

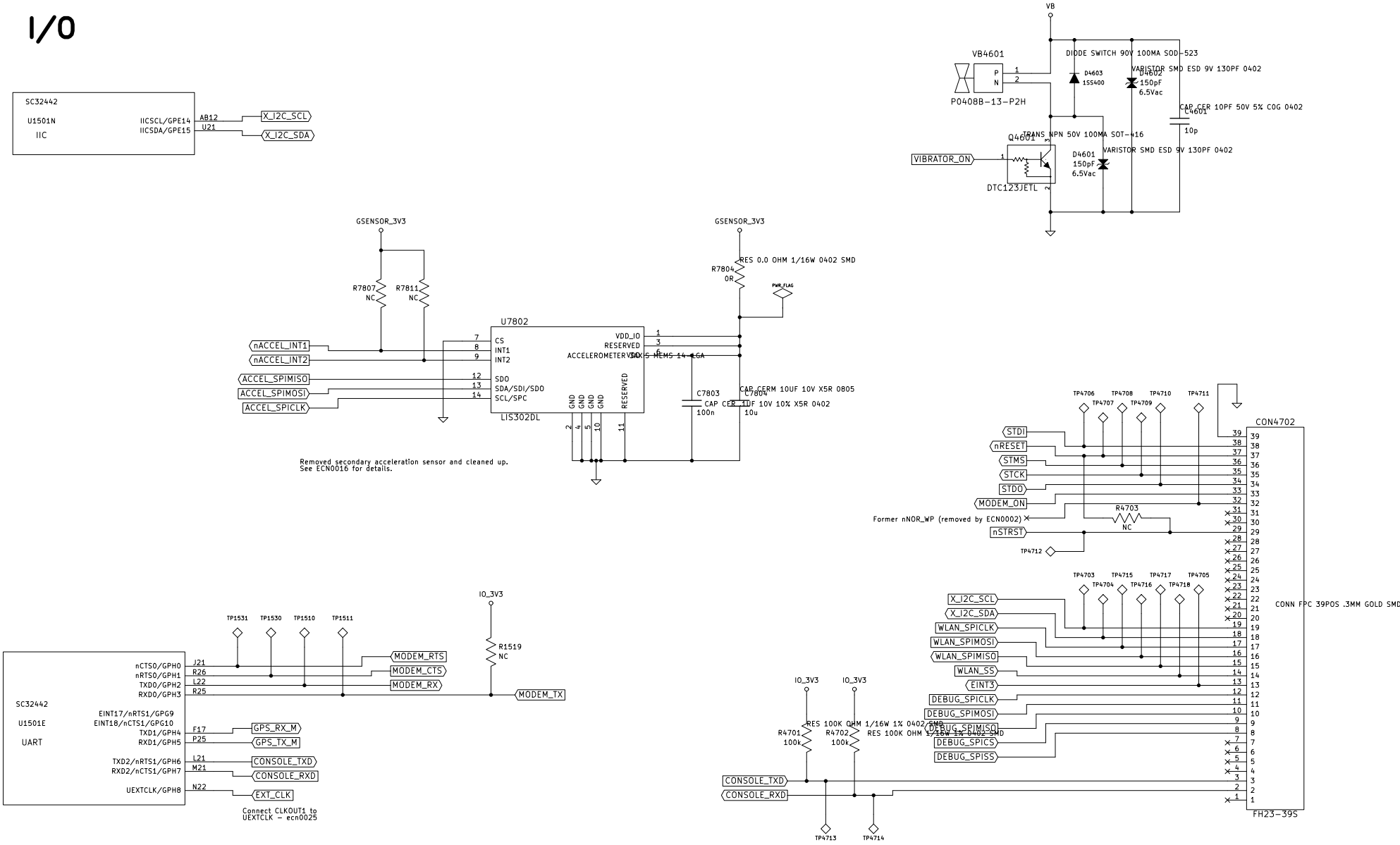
SC32442
U1501N
IIC
IICSCL/GPE14
IICSDA/GPE15
AB12
U21
X_I2C_SCL
X_I2C_SDA
VB
VB4601
P
N
P0408B-13-P2H
DIODE SWITCH 90V 100MA SOD-523
D4603
1SS400
VARISTOR SMD ESD 9V 130PF 0402
D4602
150pF
6.5Vac
CAP CER 10PF 50V 5% C0G 0402
C4601
10p
Q4601
TRANS NPN 50V 100MA SOT-416
VIBRATOR_ON
D4601
150pF
6.5Vac
VARISTOR SMD ESD 9V 130PF 0402
DTC123JETL
GSENSOR_3V3
R7807
NC
R7811
NC
U7802
nACCEL_INT1
nACCEL_INT2
ACCEL_SPIMISO
ACCEL_SPIMOSI
ACCEL_SPICLK
CS
INT1
INT2
SDO
SDA/SDI/SDO
SCL/SPC
VDD_IO
RESERVED
ACCELEROMETER VDD
LIS302DL
GND
GND
GND
GND
RESERVED
RES 0.0 OHM 1/16W 0402 SMD
R7804
0R
PWR_FLAG
C7803
100n
CAP CERM 10UF 10V X5R 0805
C7804
CAP CER 10UF 10V 10% X5R 0402
10u
Removed secondary acceleration sensor and cleaned up.
See ECN0016 for details.
TP4706
TP4708
TP4710
TP4711
TP4707
TP4709
CON4702
STDI
nRESET
STMS
STCK
STDO
MODEM_ON
Former nNOR_WP (removed by ECN0002)
nSTRST
R4703
NC
TP4712
TP4703
TP4715
TP4717
TP4705
TP4704
TP4716
TP4718
X_I2C_SCL
X_I2C_SDA
WLAN_SPICLK
WLAN_SPIMOSI
WLAN_SPIMISO
WLAN_SS
EINT3
DEBUG_SPICLK
DEBUG_SPIMOSI
DEBUG_SPIMISO
DEBUG_SPICS
DEBUG_SPISS
CONN FPC 39POS .3MM GOLD SMD
FH23-39S
IO_3V3
R1519
NC
TP1531
TP1530
TP1510
TP1511
SC32442
U1501E
UART
nCTS0/GPH0
nRTS0/GPH1
TXD0/GPH2
RXD0/GPH3
EINT17/nRTS1/GPG9
EINT18/nCTS1/GPG10
TXD1/GPH4
RXD1/GPH5
TXD2/nRTS1/GPH6
RXD2/nCTS1/GPH7
UEXTCLK/GPH8
J21
R26
L22
R25
F17
P25
L21
M21
N22
MODEM_RTS
MODEM_CTS
MODEM_RX
MODEM_TX
GPS_RX_M
GPS_TX_M
CONSOLE_TXD
CONSOLE_RXD
EXT_CLK
Connect CLKOUT1 to
UEXTCLK - ecn0025
IO_3V3
IO_3V3
R4701
100k
R4702
100k
RES 100K OHM 1/16W 1% 0402 SMD
RES 100K OHM 1/16W 1% 0402 SMD
CONSOLE_TXD
CONSOLE_RXD
TP4713
TP4714

LCM

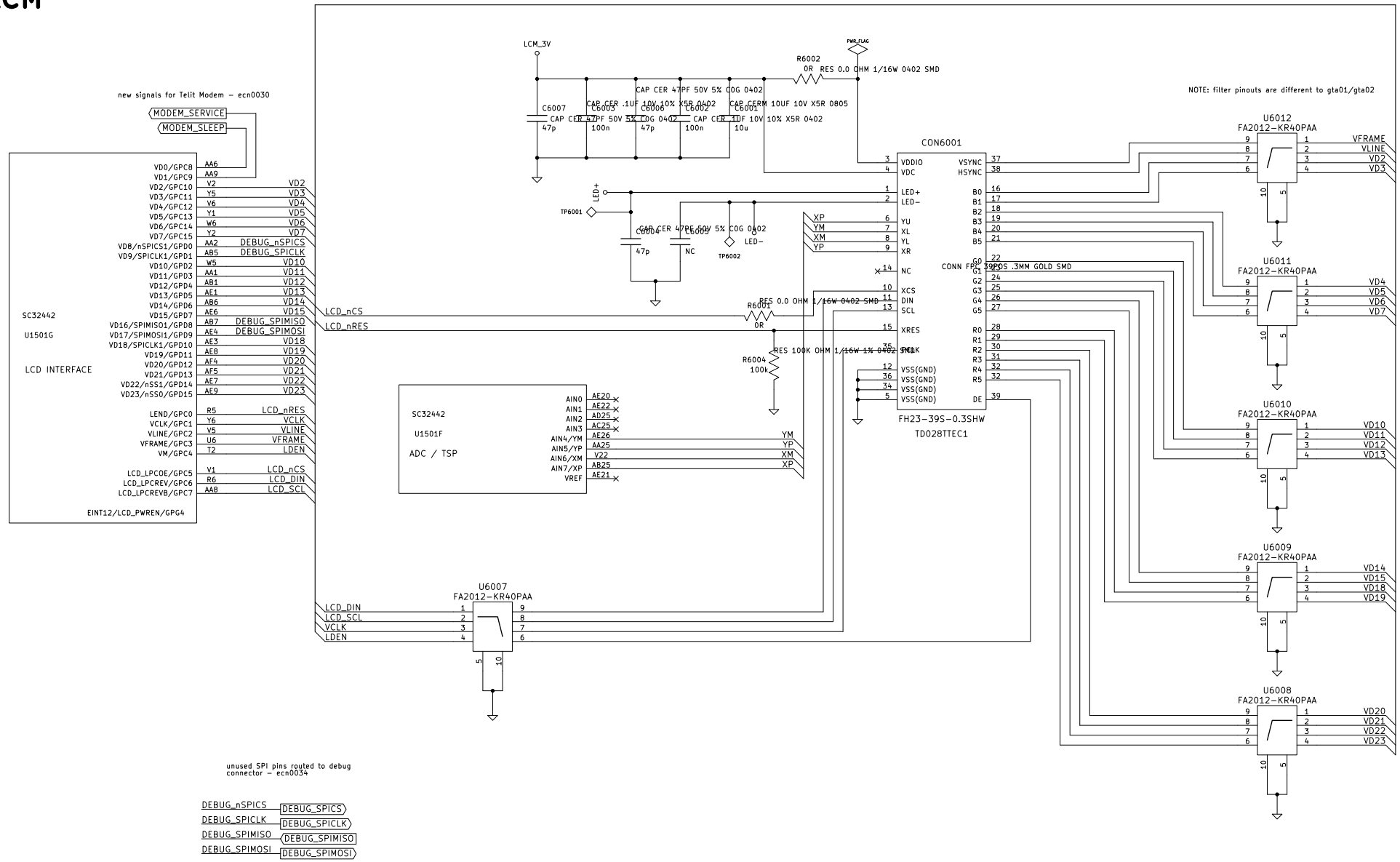
LCM_3V
PWR_FLAG
R6002
0R RES 0.0 OHM 1/16W 0402 SMD
C6007
CAP CER 47PF 50V 5% C0G 0402
47p
C6003
CAP CER .1UF 10V 10% X5R 0402
100n
C6006
CAP CER 47PF 50V 5% C0G 0402
47p
C6002
CAP CER 1UF 10V 10% X5R 0402
100n
C6001
CAPCERM 10UF 10V X5R 0805
10u
new signals for Telit Modem – ecn0030
MODEM_SERVICE
MODEM_SLEEP
SC32442
U1501G
LCD INTERFACE
VD0/GPC8 AA6
VD1/GPC9 AA9
VD2/GPC10 V2 VD2
VD3/GPC11 Y5 VD3
VD4/GPC12 V6 VD4
VD5/GPC13 Y1 VD5
VD6/GPC14 W6 VD6
VD7/GPC15 Y2 VD7
VD8/nSPICS1/GPD0 AA2 DEBUG_nSPICS
VD9/SPICLK1/GPD1 AB5 DEBUG_SPICLK
VD10/GPD2 W5 VD10
VD11/GPD3 AA1 VD11
VD12/GPD4 AB1 VD12
VD13/GPD5 AE1 VD13
VD14/GPD6 AB6 VD14
VD15/GPD7 AE6 VD15
VD16/SPIMISO1/GPD8 AB7 DEBUG_SPIMISO
VD17/SPIMOSI1/GPD9 AE4 DEBUG_SPIMOSI
VD18/SPICLK1/GPD10 AE3 VD18
VD19/GPD11 AE8 VD19
VD20/GPD12 AF4 VD20
VD21/GPD13 AF5 VD21
VD22/nSS1/GPD14 AE7 VD22
VD23/nSS0/GPD15 AE9 VD23
LEND/GPC0 R5 LCD_nRES
VCLK/GPC1 Y6 VCLK
VLINE/GPC2 V5 VLINE
VFRAME/GPC3 U6 VFRAME
VM/GPC4 T2 LDEN
LCD_LPCOE/GPC5 V1 LCD_nCS
LCD_LPCREV/GPC6 R6 LCD_DIN
LCD_LPCREVB/GPC7 AA8 LCD_SCL
EINT12/LCD_PWREN/GPG4
LCD_nCS
LCD_nRES
R6001
0R RES 0.0 OHM 1/16W 0402 SMD
R6004
100k RES 100K OHM 1/16W 1% 0402 SMD
SC32442
U1501F
ADC / TSP
AIN0 AE20
AIN1 AE22
AIN2 AD25
AIN3 AC25
AIN4/YM AE26 YM
AIN5/YP AA25 YP
AIN6/XM V22 XM
AIN7/XP AB25 XP
VREF AE21
LED+
TP6001
C6004
47p
C6005
NC
TP6002
LED–
CON6001
VDDIO 3
VDC 4
LED+ 1
LED– 2
YU 6 XP
XL 7 YM
YL 8 XM
XR 9 YP
NC 14
XCS 10
DIN 11
SCL 13
XRES 15
VSS(GND) 12
VSS(GND) 36
VSS(GND) 34
VSS(GND) 5
VSYNC 37
HSYNC 38
B0 16
B1 17
B2 18
B3 19
B4 20
B5 21
G0 22
G1 23
G2 24
G3 25
G4 26
G5 27
R0 28
R1 29
R2 30
R3 31
R4 32
R5 32
DE 39
CONN FPC 39POS .3MM GOLD SMD
FH23-39S-0.3SHW
TD028TTEC1
NOTE: filter pinouts are different to gta01/gta02
U6012
FA2012-KR40PAA
VFRAME
VLINE
VD2
VD3
U6011
FA2012-KR40PAA
VD4
VD5
VD6
VD7
U6010
FA2012-KR40PAA
VD10
VD11
VD12
VD13
U6009
FA2012-KR40PAA
VD14
VD15
VD18
VD19
U6008
FA2012-KR40PAA
VD20
VD21
VD22
VD23
U6007
FA2012-KR40PAA
LCD_DIN
LCD_SCL
VCLK
LDEN
unused SPI pins routed to debug connector – ecn0034
DEBUG_nSPICS
DEBUG_SPICLK
DEBUG_SPIMISO
DEBUG_SPIMOSI

SD CARD / SIM

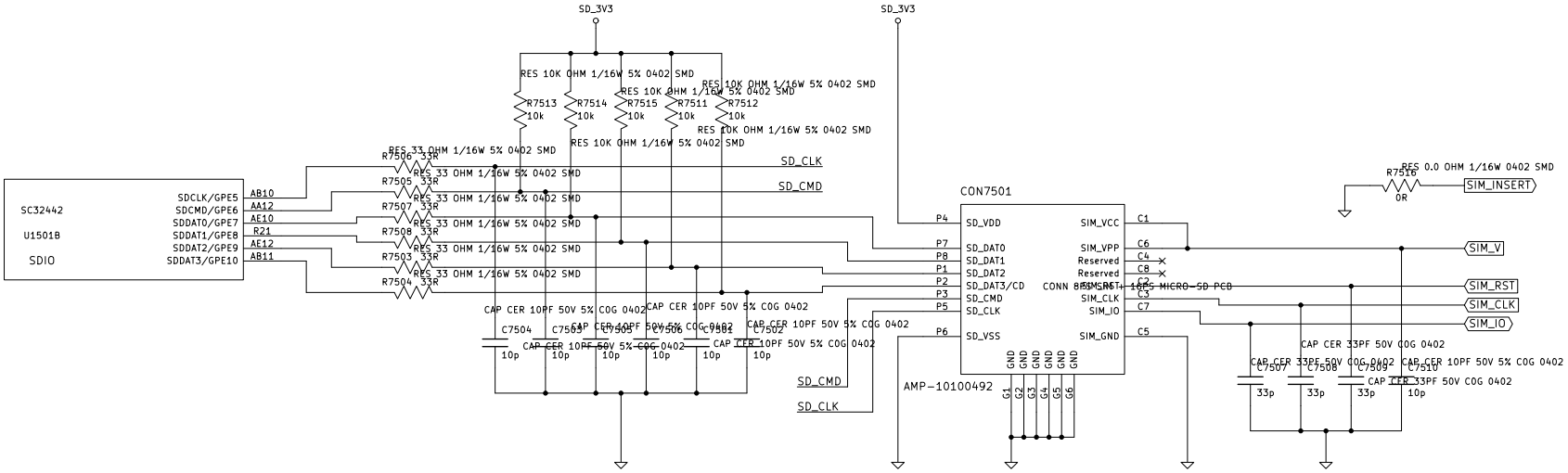
SC32442
U1501B
SDIO
SDCLK/GPE5
SDCMD/GPE6
SDDAT0/GPE7
SDDAT1/GPE8
SDDAT2/GPE9
SDDAT3/GPE10
AB10
AA12
AE10
R21
AE12
AB11
SD_3V3
RES 10K OHM 1/16W 5% 0402 SMD
R7513 10k
R7514 10k
R7515 10k
R7511 10k
R7512 10k
RES 33 OHM 1/16W 5% 0402 SMD
R7506 33R
R7505 33R
R7507 33R
R7508 33R
R7503 33R
R7504 33R
SD_CLK
SD_CMD
CAP CER 10PF 50V 5% C0G 0402
C7504 10p
C7503 10p
C7505 10p
C7506 10p
C7501 10p
C7502 10p
CON7501
P4 SD_VDD
P7 SD_DAT0
P8 SD_DAT1
P1 SD_DAT2
P2 SD_DAT3/CD
P3 SD_CMD
P5 SD_CLK
P6 SD_VSS
SIM_VCC C1
SIM_VPP C6
Reserved C4
Reserved C8
CONN 8P6C MICRO-SD PCB
SIM_CLK C3
SIM_IO C7
SIM_GND C5
GND G1 G2 G3 G4 G5 G6
AMP-10100492
RES 0.0 OHM 1/16W 0402 SMD
R7516 0R
SIM_INSERT
SIM_V
SIM_RST
SIM_CLK
SIM_IO
CAP CER 33PF 50V C0G 0402
C7507 33p
C7508 33p
C7509 33p
C7510 10p

GPS

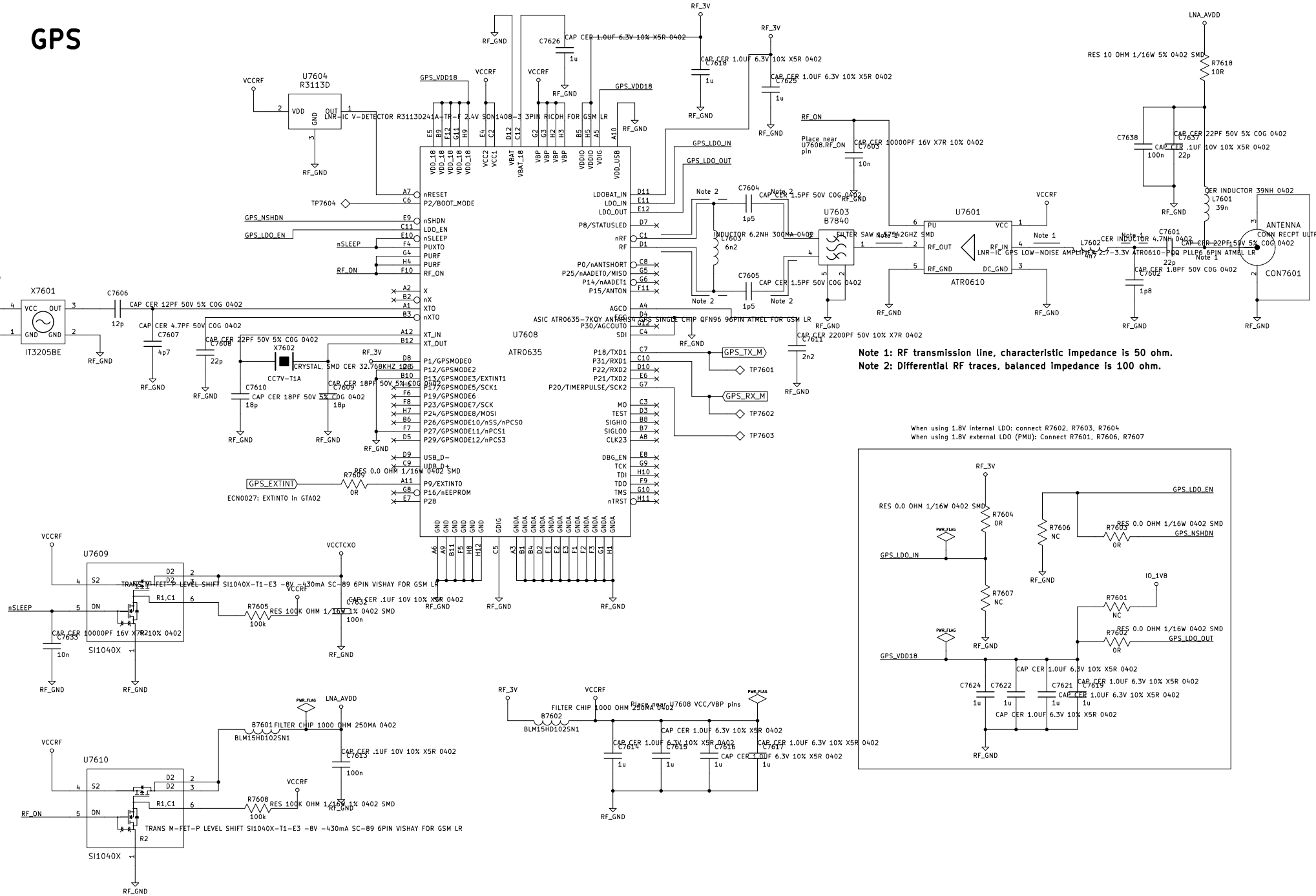
U7604
R3113D
LNR-IC V-DETECTOR R3113D241A-TR-F 2.4V SON1408-3 3PIN RICOH FOR GSM LR
U7608
ATR0635
ASIC ATR0635-7KQY ANTENNA GPS SINGLE CHIP QFN96 96PIN ATMEL FOR GSM LR
U7603
B7840
FILTER SAW MODE 1.5-2.2GHZ SMD
U7601
ATR0610
LNR-IC GPS LOW-NOISE AMPLIFIER 2.7-3.3V ATR0610-PQQ PLLP6 6PIN ATMEL LR
ANTENNA
CONN RECPT ULTRA-
CON7601
X7601
IT3205BE
X7602
CC7V-T1A
CRYSTAL, SMD CER 32.768KHZ 12.5
U7609
U7610
SI1040X
TRANS M-FET-P LEVEL SHIFT SI1040X-T1-E3 -8V -430mA SC-89 6PIN VISHAY FOR GSM LR
FILTER CHIP 1000 OHM 250MA 0402
BLM15HD102SN1
Note 1: RF transmission line, characteristic impedance is 50 ohm.
Note 2: Differential RF traces, balanced impedance is 100 ohm.
When using 1.8V internal LDO: connect R7602, R7603, R7604
When using 1.8V external LDO (PMU): Connect R7601, R7606, R7607
ECN0027: EXTINT0 in GTA02

BLUETOOTH

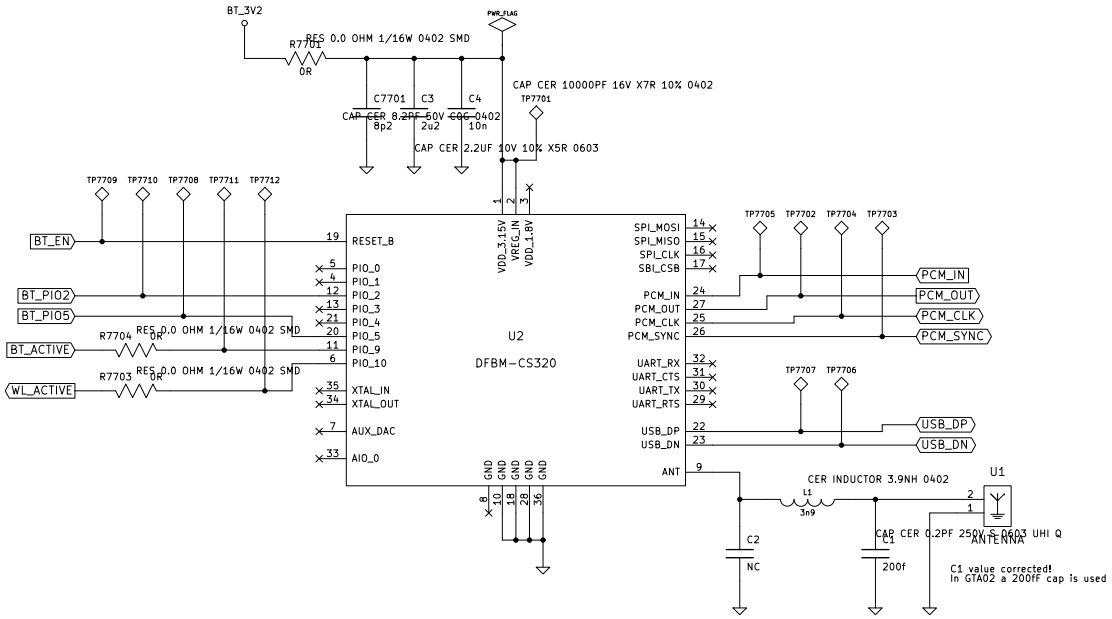
BT_3V2
R7701
0R
RES 0.0 OHM 1/16W 0402 SMD
PWR_FLAG
CAP CER 10000PF 16V X7R 10% 0402
TP7701
C7701
C3
C4
CAP CER 8.2PF 50V C0G 0402
8p2
2u2
10n
CAP CER 2.2UF 10V 10% X5R 0603
TP7709
TP7710
TP7708
TP7711
TP7712
BT_EN
BT_PIO2
BT_PIO5
BT_ACTIVE
WL_ACTIVE
R7704
0R
RES 0.0 OHM 1/16W 0402 SMD
R7703
0R
RES 0.0 OHM 1/16W 0402 SMD
RESET_B
PIO_0
PIO_1
PIO_2
PIO_3
PIO_4
PIO_5
PIO_9
PIO_10
XTAL_IN
XTAL_OUT
AUX_DAC
AIO_0
VDD_3.15V
VREG_IN
VDD_1.8V
U2
DFBM-CS320
GND
SPI_MOSI
SPI_MISO
SPI_CLK
SBI_CSB
PCM_IN
PCM_OUT
PCM_CLK
PCM_SYNC
UART_RX
UART_CTS
UART_TX
UART_RTS
USB_DP
USB_DN
ANT
TP7705
TP7702
TP7704
TP7703
PCM_IN
PCM_OUT
PCM_CLK
PCM_SYNC
TP7707
TP7706
USB_DP
USB_DN
CER INDUCTOR 3.9NH 0402
L1
3n9
U1
ANTENNA
C2
NC
CAP CER 0.2PF 250V S 0603 UHI Q
C1
200f
C1 value corrected!
In GTA02 a 200fF cap is used

WLAN

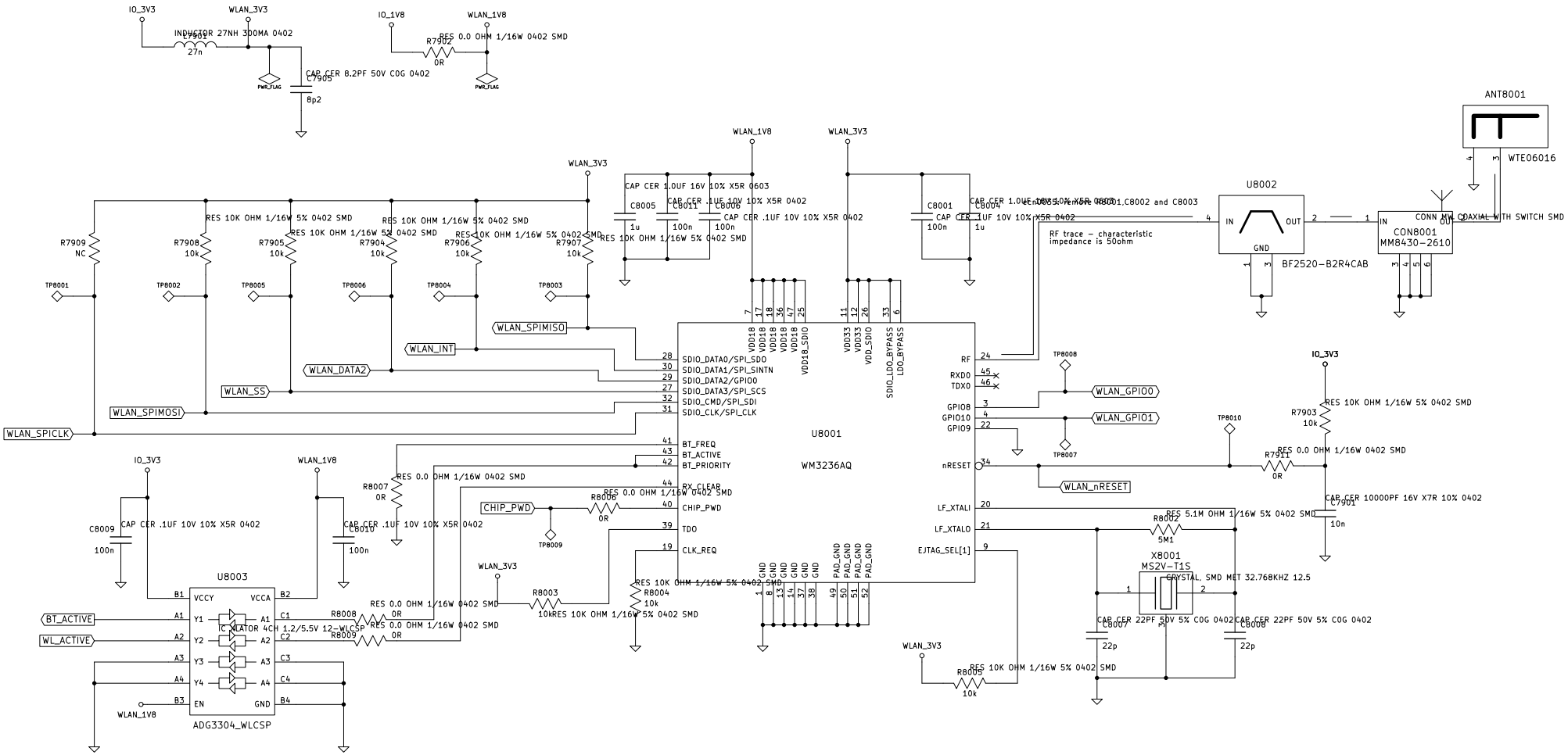
IO_3V3
WLAN_3V3
INDUCTOR 27NH 300MA 0402
L7901
27n
PWR_FLAG
CAP CER 8.2PF 50V C0G 0402
C7905
8p2
IO_1V8
WLAN_1V8
R7902
0R
RES 0.0 OHM 1/16W 0402 SMD
ANT8001
WTE06016
U8002
IN
OUT
GND
BF2520-B2R4CAB
CON8001
MM8430-2610
CONN MW COAXIAL WTH SWITCH SMD
CAP CER 1.0UF 16V 10% X5R 0603
C8005
1u
C8011
100n
C8006
100n
CAP CER .1UF 10V 10% X5R 0402
C8001
100n
C8004
1u
RF trace - characteristic impedance is 50ohm
RES 10K OHM 1/16W 5% 0402 SMD
R7909
NC
R7908
10k
R7905
10k
R7904
10k
R7906
10k
R7907
10k
TP8001
TP8002
TP8005
TP8006
TP8004
TP8003
WLAN_SPIMISO
WLAN_INT
WLAN_DATA2
WLAN_SS
WLAN_SPIMOSI
WLAN_SPICLK
SDIO_DATA0/SPI_SDO
SDIO_DATA1/SPI_SINTN
SDIO_DATA2/GPIO0
SDIO_DATA3/SPI_SCS
SDIO_CMD/SPI_SDI
SDIO_CLK/SPI_CLK
BT_FREQ
BT_ACTIVE
BT_PRIORITY
RX_CLEAR
CHIP_PWD
TDO
CLK_REQ
U8001
WM3236AQ
VDD18
VDD18_SDIO
VDD33
VDD_SDIO
SDIO_LDO_BYPASS
LDO_BYPASS
RF
RXD0
TDX0
GPIO8
GPIO10
GPIO9
nRESET
LF_XTALI
LF_XTALO
EJTAG_SEL[1]
GND
PAD_GND
TP8008
TP8007
TP8010
WLAN_GPIO0
WLAN_GPIO1
WLAN_nRESET
R7903
10k
R7911
0R
C7901
10n
CAP CER 10000PF 16V X7R 10% 0402
RES 5.1M OHM 1/16W 5% 0402 SMD
R8002
5M1
X8001
MS2V-T1S
CRYSTAL, SMD MET 32.768KHZ 12.5
C8007
22p
C8008
22p
CAP CER 22PF 50V 5% C0G 0402
R8005
10k
R8007
0R
R8006
0R
TP8009
R8003
10k
R8004
10k
C8009
100n
C8010
100n
U8003
VCCY
VCCA
Y1
Y2
Y3
Y4
A1
A2
A3
A4
EN
GND
B1
B2
C1
C2
C3
C4
B3
B4
ADG3304_WLCSP
BT_ACTIVE
WL_ACTIVE
R8008
R8009

MODEM

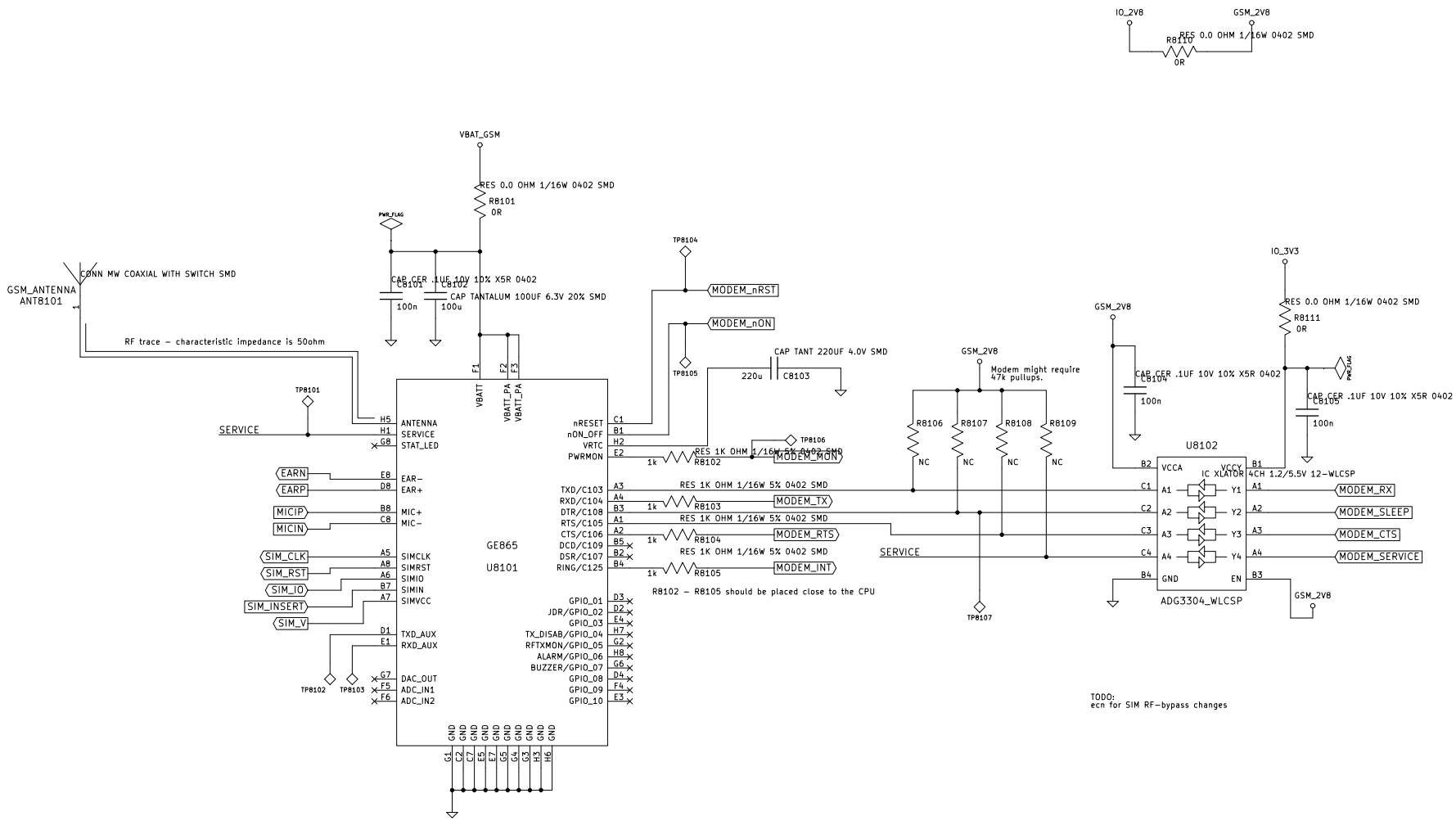

TODO:
ecn for SIM RF-bypass changes