ISO14001 FM:02405E10222ROM

APPROVAL SHEET

CUSTOMER	大眾電腦股份有限公司 (環保材料)		
PART NO	IM-413TN OmnidirectionalCondenserMicrophone		
TYPE(0dB=1V/Pa)	SENSITIVITY:-42 ±3dB	TEST CONDITION:2.0V	2.2KΩ
TYPE(0dB=1V/μBar)	SENSITIVITY:-62±3dB	TEST CONDITION:2.0V	2.2KΩ
ISSUE	COPY		
DATE	May. 2, 2007		
UNDERTAKER		CONTACT	

VENDOR	
CHECKED BY	APPROVED BY

CUSTOMER
COUNTERSIGN

REMARK:PLEASE SEND ONE OF APPROVAL WITH COUNTERSIGN TO US AFTER BEING APPROVED

名 巽 科 技 有 限 公 司
IMPERIAL ELECTRONICS TECHNOLOGY CO.,LTD
臺北縣三重市溪尾街 328-8 號 13 樓
13F.,NO.328-8,HSI-WEI ST.SAN-CHUNG CITY,
TAIPEI HSIENG,TAIWAN R.O.C.
TEL:(02)2857-4956,2857-2457 FAX:(02)2857-6940
WWW.globalsources.com/imp.co

鸿彰电子（深圳）有限公司
HONG ZHANG ELECTRONICS (SHEN ZHEN) CO.,LTD
深圳市寶安區沙井鎮新橋芙蓉工業區 1 隊廠區 2 號
INDUSTRY FURONG XINGQIAO SHAJING SHENZHEN CHINA
TEL:(0755) 29894836 29894832 27249159 27249152
FAX:(0755) 29880488
EMAIL: imp@globalsources.com

1 .	Scope	This specification applies to electret condenser microphone. Apply to Pb free reflow soldering
2.	Model No.	IMP-413TN
3.	Test Condition	
	3-1. Standard Test Condition	Temperature : 5～35℃ Rel.humidity : 45～85%(RH) Pressure : 86～106kPa
	3-2. Judgment Test Condition	Temperature : 20±2℃ Rel.humidity : 60～70%(RH) Pressure : 86～106kPa
4.	Specifications	(Conform to JIS C5502)
	4-1.(TBD) Sensitivity	-42±3 dB (0dB=1V/1 Pa at 1kHz) *Do not perform more than twice After reflow soldering twice with following condition, the sensitivity of the microphone shall not be changed more than ±3dB from initial value.
	4-2. Frequency Response	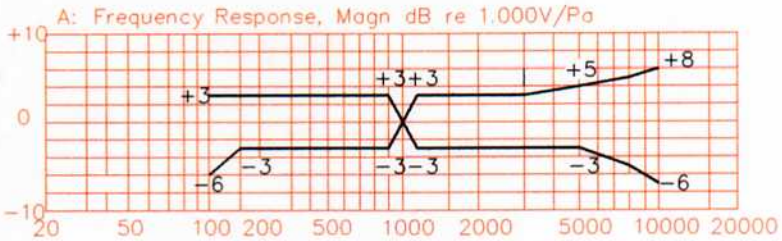
	4-3. Impedance	2.2kΩ (Maximum)
	4-4. Standard Power Supply	D.C 2V

4-5. Operating Voltage	D.C 1。4～5 V
	When 1.5V, sensitivity allowance to be 3dB based on the sensitivity at 2V.
4-6. Current Comsumption	0.5 mA (Maximum)
4-7. S/N	55 dB (Minimum) (A-Curve at 1kHz 1 Pa)
4-8. Earth	⊖
4-9. Phase	Unity
4-10. Maximum input sound Pressure Level	100 dB S.P.L(at 1kHz)
	Distortion 1% (Maximum)
4-11. Directivity	OMNI-Directional

4-12. Test Circuit

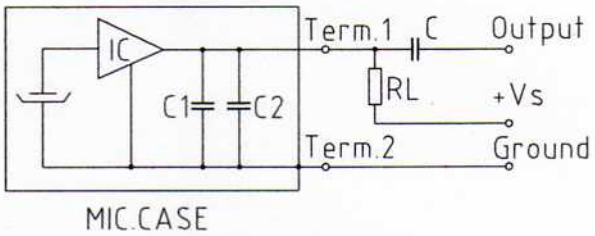

RL=2.2K External resistor
Vs=2V C1=33PF C2=10PF
C = 1 μF

4-13. Appearance Drawing

Unit: mm

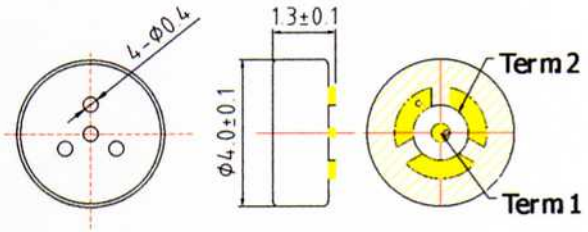

SPECIFICATIONS

5.	Reliability Tests	
	All tests are to be carried out on the same test batch in the order listed.	
	The sensitivity to be within ± 3 dB of initial sensitivity after 3 h of conditioning at 20 ℃.	
	5-1. Vibration	Frequency 1 : 10Hz～55Hz Amplitude : ±0.15 Frequency 2 : 55Hz～150Hz Acceleration : 20 m/s² Change of Frequency: 1 octave/min 2h in each of 3 axes
	5-2. Shocks	Pulse shape : half sinusoidal Pulse duration : 11ms Acceleration : 150 m/s² Number of jolts :10 in each of 3 axes (5 in positive and 5 in negative direction)
	5-3. Dry Heat/cold	+70℃ for 72h −20℃ for 72h
	5-4. Damp Heat	90 %RH, +40℃ for 240h
	5-5. Temperature cycles	-20℃ ⟷ +25℃ ⟷ +70℃ } 10 cycles (2h) (1h) (2h) (1h) (2h)
	5-6. Rapid Temperature Change	Low:-20℃, high:+70℃ Dwell time : 30 min } 10 cycles Transfer time(-20～+70℃): 30s
6.	Note	
	6-1. Operation Temperature	-20℃ ～ +70℃
	6-2. Storage Temperature	-20℃ ～ +70℃

1.	**Reflow soldering profile (TBD)**	**Ambient Temperature** 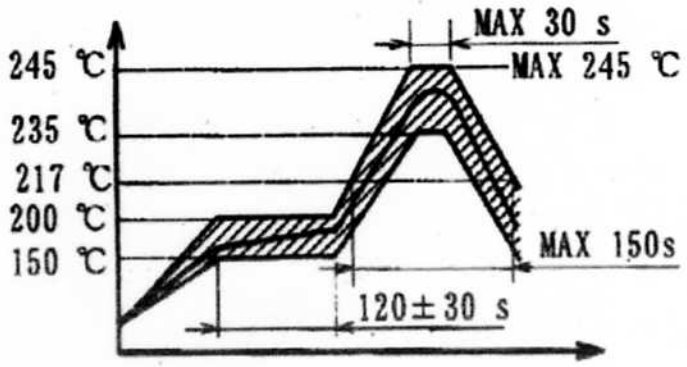 NOTE : After the first reflow , the second reflow is tested on keeping ECM the usual temperature.
2.	2-1. ECM may easily destroy by the static electricity, and the countermeasure for eliminating the static electricity shall be executed.	
3.	3-1. It is not possible to wash this electret condenser microphone. To expose X-ray, etc. influences characteristic of this microphone. Please confirm device condition to Hosiden, if there is possibility to use X-ray device, etc. So, Recommendable X-ray device condition is as below. Voltage : < 80 kV Current : < 80 uA Distance: > 30 cm Time : < 30 s ※The sensitivity to be within ± 1dB of initial sensitivity.	

4.

Repair condition for Reflow ECM

4-1. Please use Hot wind ceremony spot heater soldering copper for Repair of Reflow ECM.

4-2. The temperature of the heater soldering copper tip shall be below 400 ℃.

4-3. Please do not put closer the heater soldering copper tip more nearly than 2 mm to ECM.

4-4. The soldering time shall be within 10 s.

4-5. Please pay attention, so that the hot wind does not enter into the ECM sound hole.

4-6. As for the heater soldering copper tip, please aim for the Place which ECM (terminal) and base are contacting.

4-7 ECM may easily destroyed by the static electricity, and the countermeasure for eliminating the static electricity (Hot wind ceremony spot heater soldering copper, for worktable and for human body) shall be executed.

4-8.Recommendation work figure

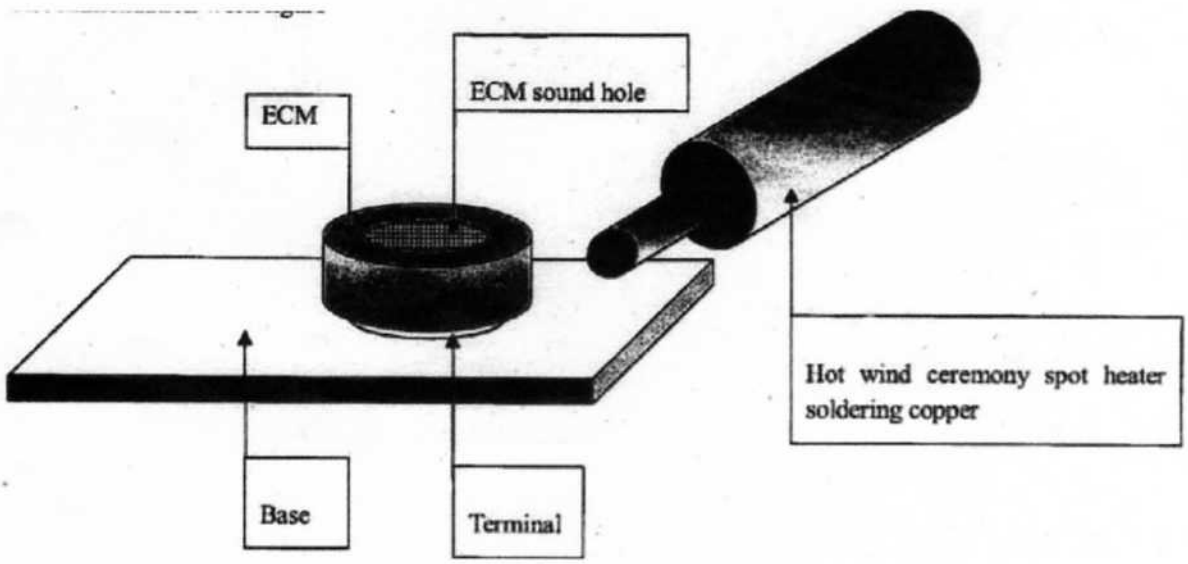

REVISION					
ZONE	LTR	DESCRIPTION	DATE	REVISED	APPROVED

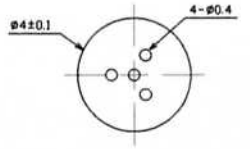

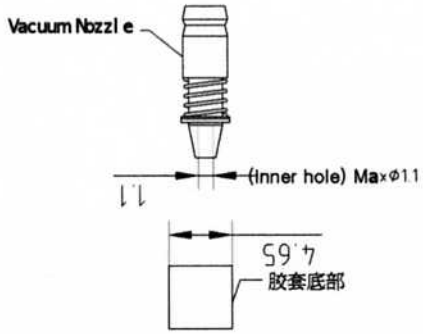

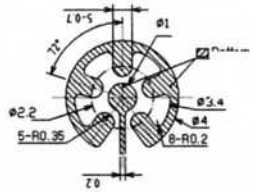

①	Output
②	Earth

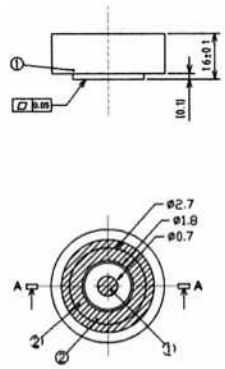

** Do not pull vacuum directly over acoustic holes^^

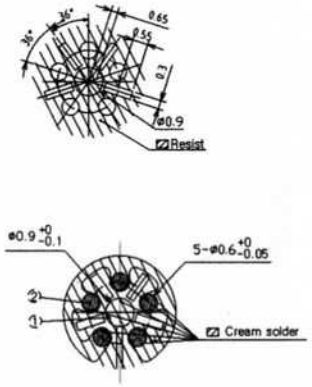

Recommendable PCB Pattern

1. Measure common difference that is not designated makes ±0.1
2. Measure common difference of the Recommendable PCB Pattern makes ±0.05
3. Recommendable

   Thickness of Cream solder : 100~150um

LTR	PART NAME	QTY	MATERIAL	Color
2	Print Board	1	EPOXY	
1	Case	1		

DWN	顾美芳	DATE	2006-02-18	SCALE 10:1	NAME ELECTRET CONDENSER MICROPHONE
CHKD	何定安	DATE	2006-02-18	3RD ANGLE PROJECTION	
APVD	黎明刚	DATE	2006-02-18		MODEL NO. IMP-413TN
FACTORY:					DWG NO.

UNLESS OTHERWISE SPEC IF IE D DIMENSIONS ARE IN MILLIMETERS INCHES

TOLERANCE ON DECIMALS ±0.1

TITLE IMP-413TN NUMBER

TITLE IMP-415TN NUMBER

.PACKING SPECIFICATION

Carrier Tape Dimension

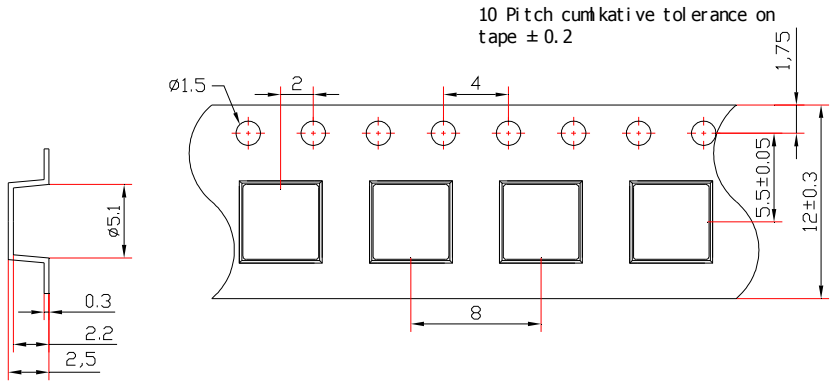

CARRLER TAPE	MATERIAL	COLOR	WIDTH
	PS	BLACK	12
COVER SHEET	9.5mm*0.06	PACKING QUANTITY	3000/1 PCS/REEL

Reel Dimension(Reel diameter=13)

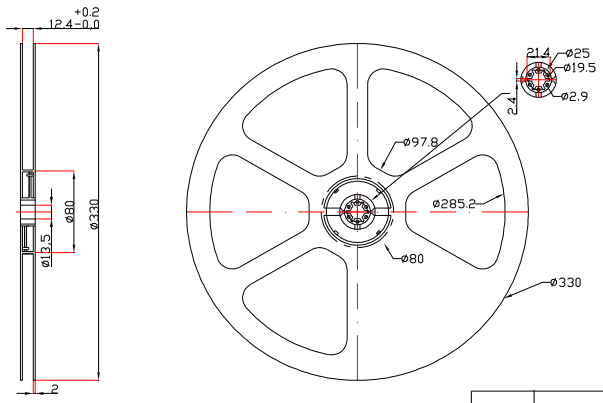

REEL	MATERIAL	COLOR	HUB	SIZE
	PS	PS	80	330
PACKING QUANTITY				3000/1 PCS/REEL

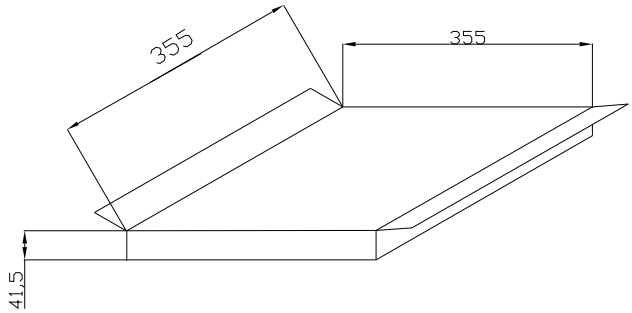

INERBOX
3,000PCS

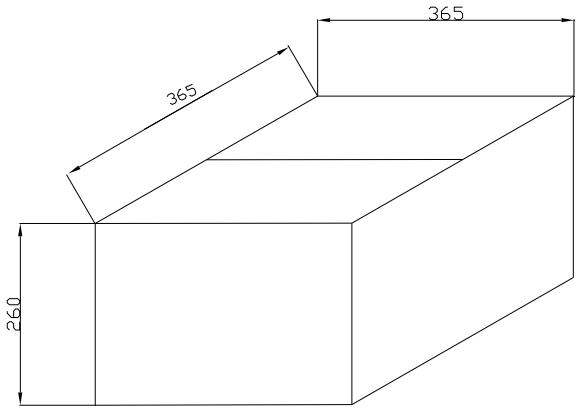

CARTON
15,000PCS

Integration Report

Report No.:SZR060810117601 Date:Aug. 10, 2006 Page 1 of 3

Client :IMPERIAL ELECTRONICS TECHNOLOGY CO.,LTD
HONG ZHANG ELECTRONICS (SHEN ZHEN) CO.,LTD

Address :13F,NO.328-8,HIS-WET ST.SAN-CHUNG CITY,TAIPEI SHIEN,TAIWAN
SEC.2,BLK.1,XINQIAO FURONG INDUSTRIAL PARK,SHAJING TOWN,SHENZHEN

Report on the submitted sample said to be:

Sample Name : IMP
Sample Description : IMP-O4 SERIES
Sample Received Date : Aug. 2, 2006
Completed Date : Aug. 10, 2006
Client Requested : As specified by client, to integrate the test reports submitted by client.

IMP

No.	Component	Description	Report No.	Laboratory	Date
1	PCB	Green PCB board	SH595866/CHEM	SGS	2005-12-13
2	CHAMBER	Beige plastic	SH5104734/CHEM	SGS	2006-01-06
3	PLATE	Silvery metal pieces	GZSCR051299096/LP	SGS	2005-12-14
4	DIAPHRAGM	Silvery metal part	SH591839/CHEM	SGS	2005-12-02
5	SPACER	Transparent red plastic	2042601/EC	SGS	2005-11-17
6	FET	FET	JP/2005/101286	SGS	2005-11-14
7	SCREEN	Black adhesive pieces	GZSCR051295248/LP	SGS	2005-12-07
8	CASE	Silvery metal shell	SH6023365/CHEM	SGS	2006-03-13
9	RING	Golden metal	GZSCR051184812/LP	SGS	2005-11-11
10	CAPACITOR	MLCC NPO BME	KA/2005/80970	SGS	2005-08-25
11	PIN	Golden metal pin	SH598474/CHEM	SGS	2005-12-20
12	SOLDERING TIN	Silvery metal wire	GZ0602021439/CHEM	SGS	2006-03-06

Integration Report

Report No.:SZR060810117601 Date:Aug. 10, 2006 Page 2 of 3

Test Results:

Test items	Contents		
	1	2	3
Lead	N.D.	N.D.	16ppm
Cadmium	N.D.	N.D.	N.D.
Mercury	N.D.	N.D.	N.D.
Hexavalent Chromium	N.D.	N.D.	N.D.
Polybrominated Biphenyls(PBBs)	N.D.	N.D.	/
Polybrominated Diphenyl Ethers(PBDEs)	N.D.	N.D.	/

Test items	Contents		
	4	5	6
Lead	N.D.	N.D.	N.D.
Cadmium	N.D.	N.D.	N.D.
Mercury	N.D.	N.D.	N.D.
Hexavalent Chromium	N.D.	N.D.	N.D.
Polybrominated Biphenyls(PBBs)	/	N.D.	N.D.
Polybrominated Diphenyl Ethers(PBDEs)	/	N.D.	N.D.

Test items	Contents		
	7	8	9
Lead	3ppm	21ppm	66ppm
Cadmium	N.D.	N.D.	3ppm
Mercury	N.D.	N.D.	N.D.
Hexavalent Chromium	N.D.	N.D.	N.D.
Polybrominated Biphenyls(PBBs)	N.D.	/	/
Polybrominated Diphenyl Ethers(PBDEs)	N.D.	/	/

5F., Huaqiang logistics, Longzhu Road, Nanshan, Shenzhen, China
Tel:86-755-33307999 Fax:86-755-33307988
1F., Building C, Hongwei industrial zone, Baoan 70 district, Shenzhen, China
Tel:86-755-29799666 Fax:86-755-29799699
E-mail:info@cti-cert.com http://www.cti-cert.com

Integration Report

Report No.:SZR060810117601 Date:Aug. 10, 2006 Page 3 of 3

Test Results:

Test items	Contents		
	10	11	12
Lead	N.D.	79ppm	64ppm
Cadmium	N.D.	N.D.	N.D.
Mercury	N.D.	N.D.	N.D.
Hexavalent Chromium	N.D.	N.D.	N.D.
Polybrominated Biphenyls(PBBs)	N.D.	/	N.D.
Polybrominated Diphenyl Ethers(PBDEs)	N.D.	/	N.D.

Note: -N.D. = Not Detected (<report limit).
-ppm = mg/kg=parts per million.

Disclaimer:

★ The integration report is not equivalent to the chemical test report, all the test results are based on the test report submitted by the client.

★ If this disclaimer contradicts any other terms and conditions of CTI, this disclaimer will prevail.

*** End of report ***

Written by Kevin Approved by Jacky Lam

Inspected by Position Manager

Date Aug. 10, 2006

This report shall not be added, deleted, or amended. The results shown in this report are only available to the reports submitted by the client. Without written approval of CTI, this test report shall not be copied in part or published as advertisement.

CTI Physical & Chemical Lab.

5F., Huaqiang logistics, Longzhu Road, Nanshan, Shenzhen, China
Tel:86-755-33307999 Fax:86-755-33307988
1F., Building C, Hongwei industrial zone, Baoan 70 district, Shenzhen, China
Tel:86-755-29799666 Fax:86-755-29799699
E-mail:info@cti-cert.com http://www.cti-cert.com

№ 001457